US 20230399986A1

(19) **United States**

(12) **Patent Application Publication** (10) **Pub. No.: US 2023/0399986 A1**

**Minas** (43) **Pub. Date: Dec. 14, 2023**

(54) **MONITORING SYSTEMS FOR HYDROGEN FUELED AIRCRAFT**

(71) Applicant: **General Electric Company**, Schenectady, NY (US)

(72) Inventor: **Constantinos Minas**, Niskayuna, NY (US)

(21) Appl. No.: **17/836,681**

(22) Filed: **Jun. 9, 2022**

**Publication Classification**

(51) **Int. Cl.**

| | |
|---|---|
| ***F02C 9/46*** | (2006.01) |
| ***F02C 7/232*** | (2006.01) |
| ***F02C 9/40*** | (2006.01) |

(52) **U.S. Cl.**

CPC ..... ***F02C 9/46*** (2013.01); ***F02C 7/232*** (2013.01); ***F02C 9/40*** (2013.01); *F05D 2220/323* (2013.01); *F05D 2260/60* (2013.01); *F05D 2260/80* (2013.01); *F05D 2270/306* (2013.01); *F05D 2270/802* (2013.01)

(57) **ABSTRACT**

Methods and apparatus are for monitoring systems for hydrogen fueled aircraft. An example fuel distribution system distribution system includes a first hydrogen fuel tank, a first sensor associated with the first hydrogen fuel tank, a second sensor associated with the combustor, and a controller to determine a first rate of change in a first amount of hydrogen in the first hydrogen fuel tank based on a first input from the first sensor, determine a flow rate of hydrogen into the combustor based on a second input from the second sensor, determine an average mass loss rate based on the first rate of change and the flow rate and in response to determining the average mass loss rate satisfies a first threshold, determine a leak is present in the fuel distribution system.

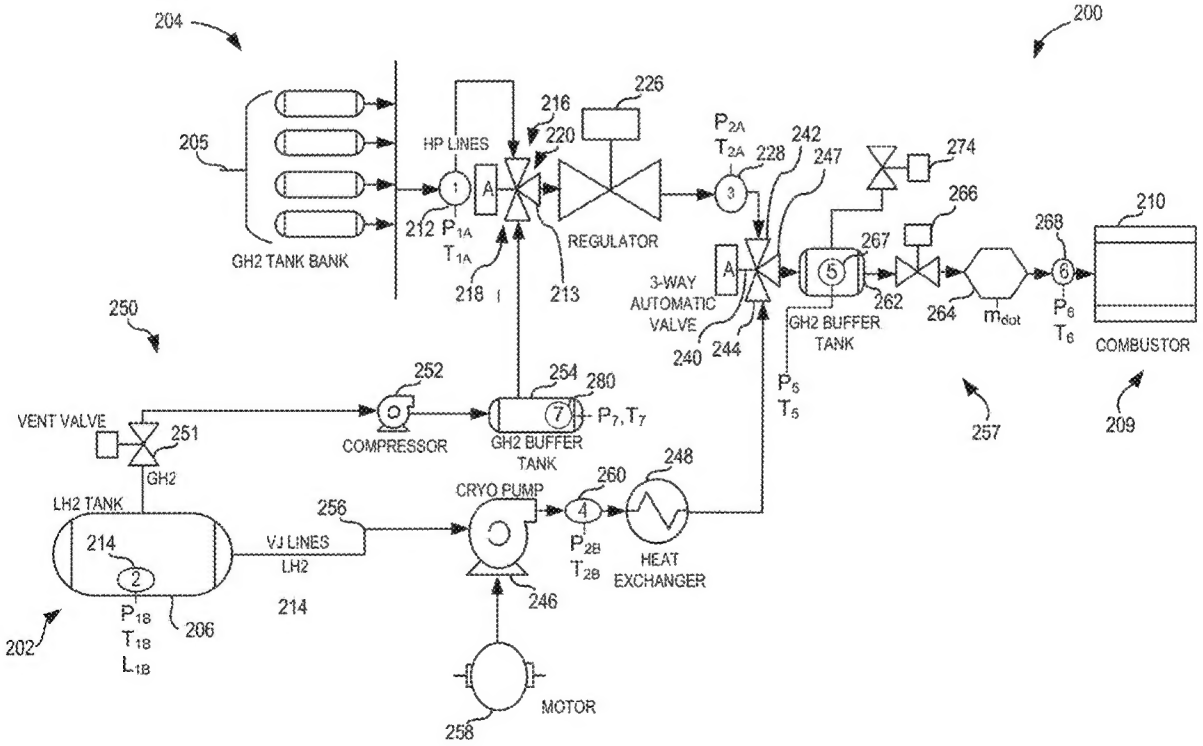

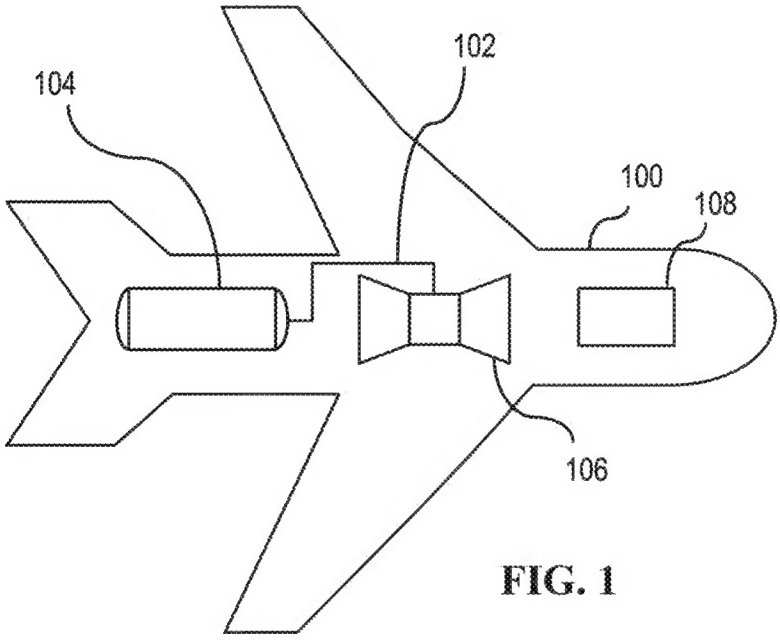


FIG. 1

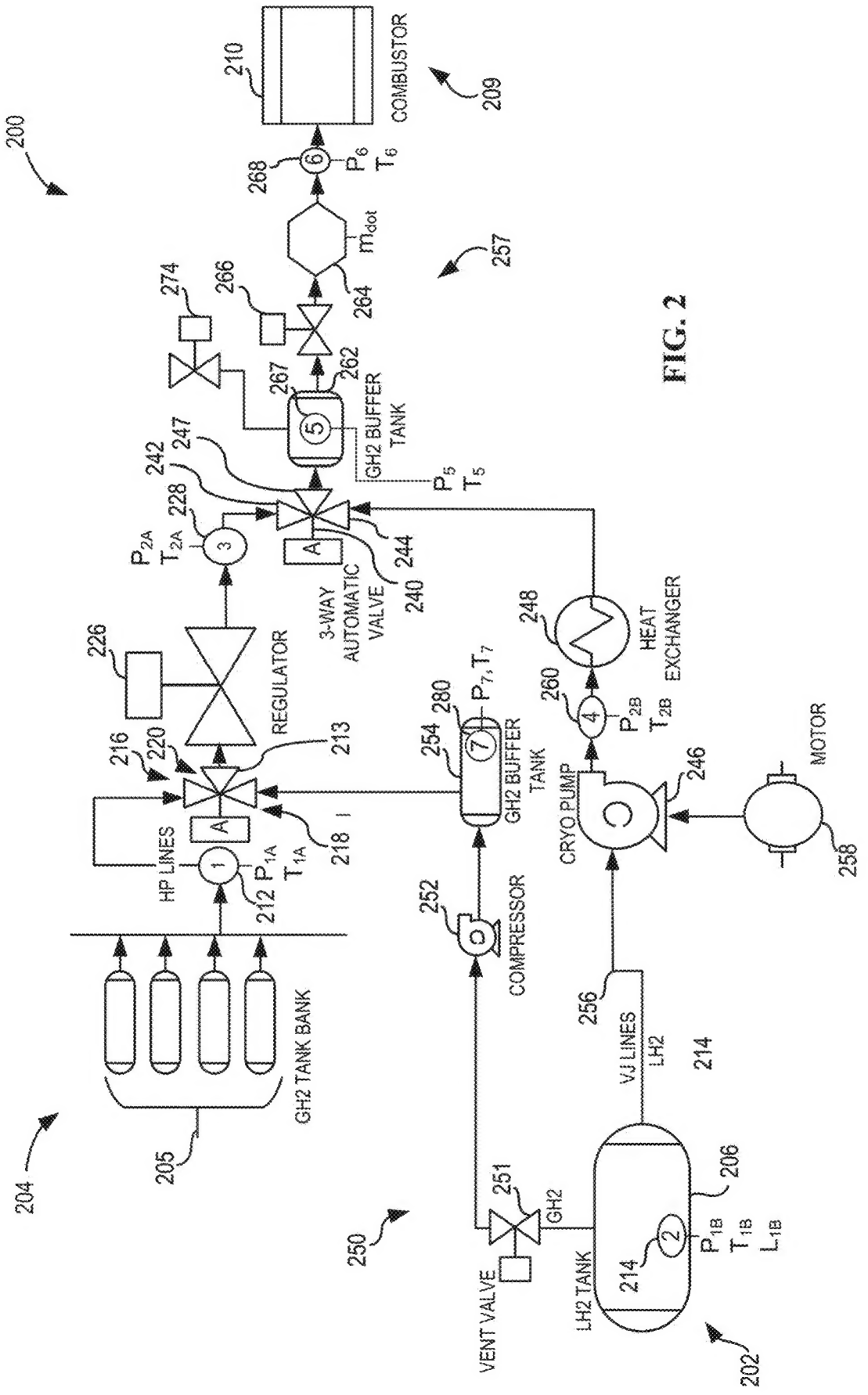
200
COMBUSTOR
210
209
268
$P_6$
$T_6$
$m_{dot}$
257
274
266
264
267
262
GH2 BUFFER TANK
$P_5$
$T_5$
242
247
228
$P_{2A}$
$T_{2A}$
244
240
3-WAY AUTOMATIC VALVE
226
REGULATOR
216
220
213
218
HP LINES
212
$P_{1A}$
$T_{1A}$
248
HEAT EXCHANGER
260
$P_{2B}$
$T_{2B}$
254
280
$P_7, T_7$
GH2 BUFFER TANK
CRYO PUMP
246
MOTOR
258
252
COMPRESSOR
256
VJ LINES
LH2
214
GH2 TANK BANK
205
204
251
GH2
206
250
VENT VALVE
LH2 TANK
214
$P_{1B}$
$T_{1B}$
$L_{1B}$
202

FIG. 2

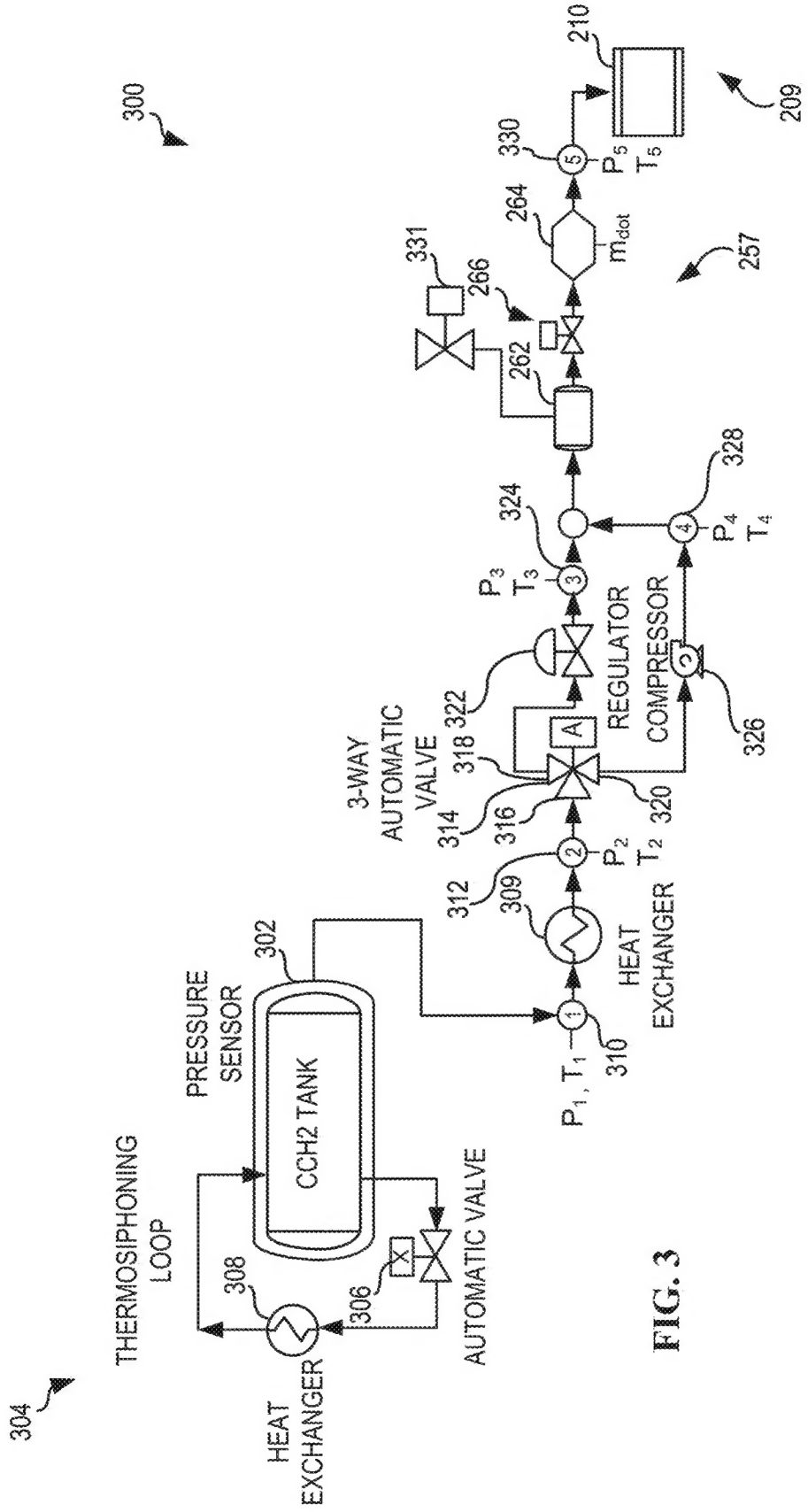
300
304
THERMOSIPHONING LOOP
HEAT EXCHANGER
308
306
AUTOMATIC VALVE
PRESSURE SENSOR
302
CCH2 TANK
P1, T1
310
1
HEAT EXCHANGER
309
312
2
P2
T2
3-WAY AUTOMATIC VALVE
314
316
318
320
322
A
REGULATOR
COMPRESSOR
326
P3
T3
3
324
4
P4
T4
328
262
266
331
264
mdot
257
330
5
P5
T5
210
209

FIG. 3

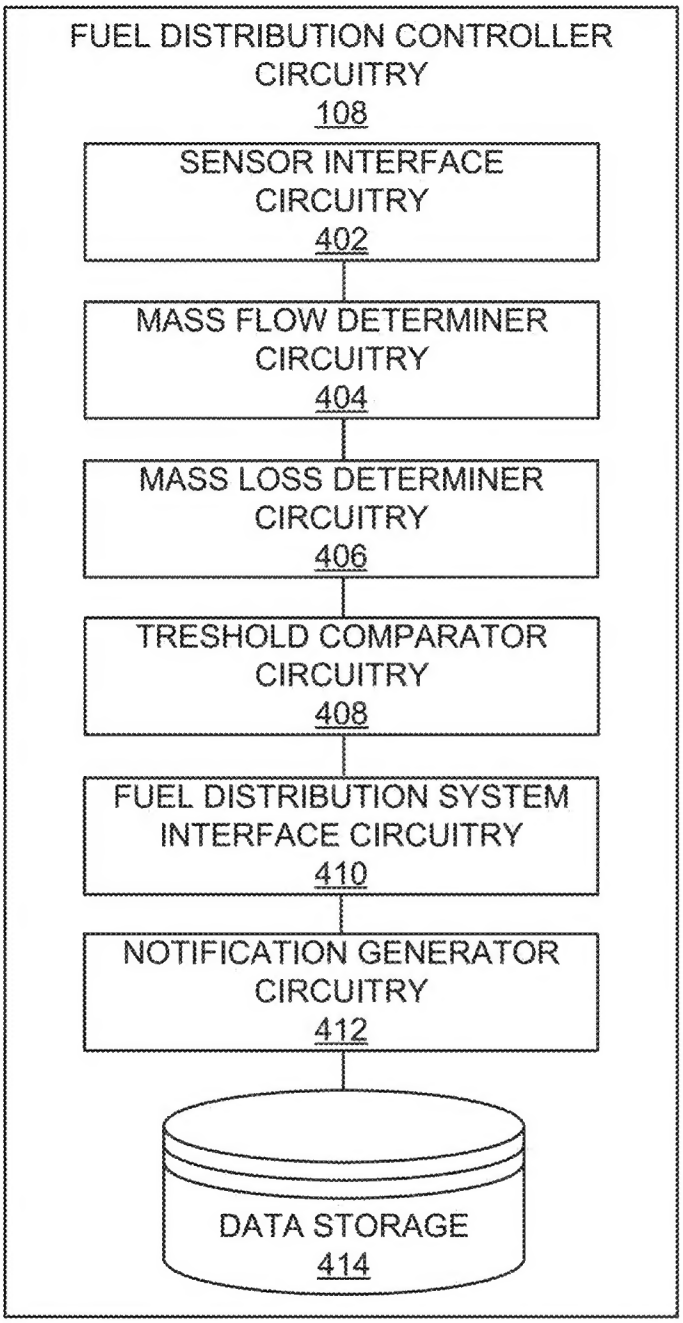
FUEL DISTRIBUTION CONTROLLER CIRCUITRY
108
SENSOR INTERFACE CIRCUITRY
402
MASS FLOW DETERMINER CIRCUITRY
404
MASS LOSS DETERMINER CIRCUITRY
406
TRESHOLD COMPARATOR CIRCUITRY
408
FUEL DISTRIBUTION SYSTEM INTERFACE CIRCUITRY
410
NOTIFICATION GENERATOR CIRCUITRY
412
DATA STORAGE
414

FIG. 4

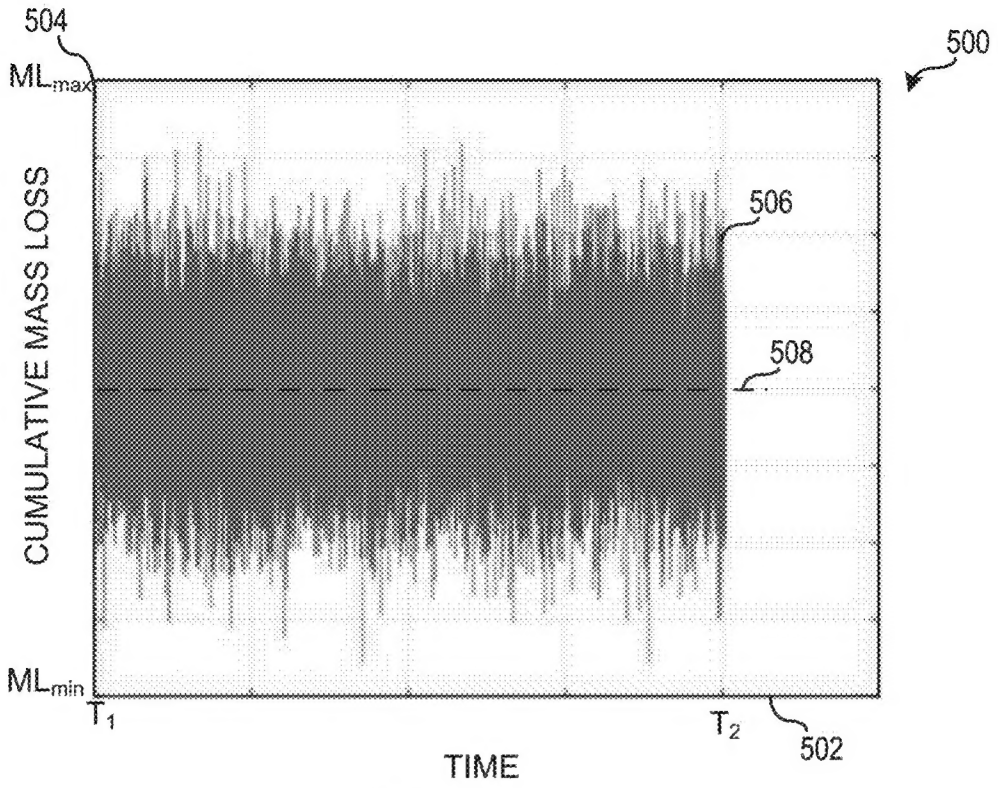
504
500
$ML_{max}$
CUMULATIVE MASS LOSS
506
508
$ML_{min}$
$T_1$
$T_2$
502
TIME

FIG. 5A

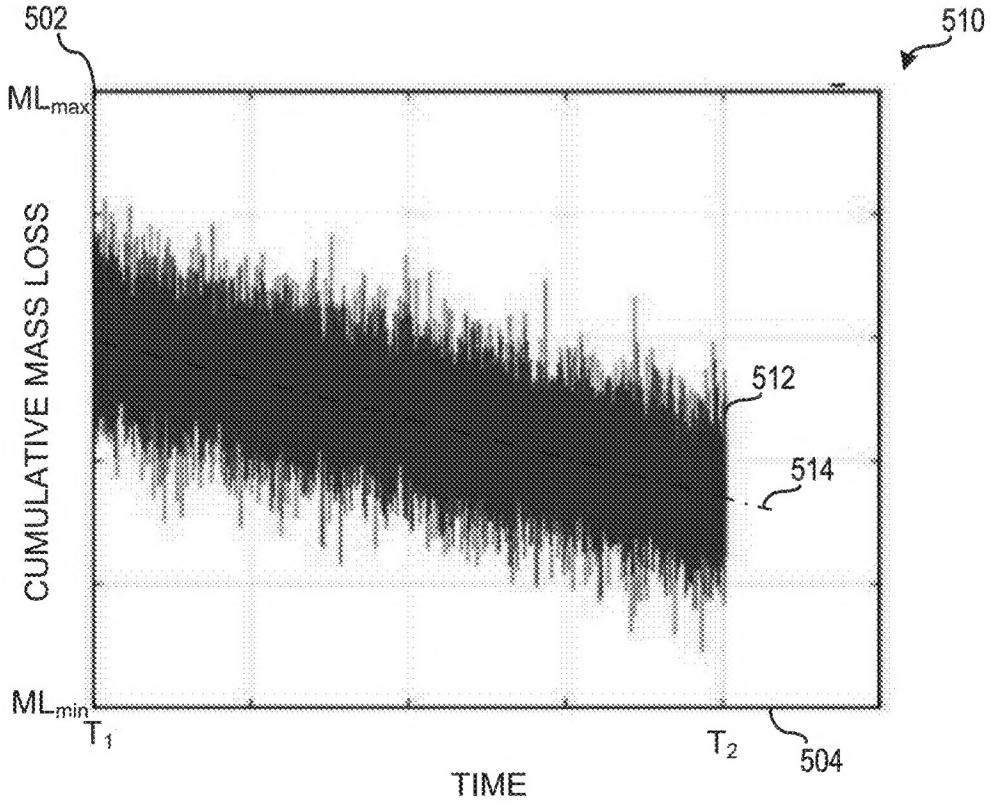
502
510
$ML_{max}$
CUMULATIVE MASS LOSS
512
514
$ML_{min}$
$T_1$
$T_2$
504
TIME

FIG. 5B

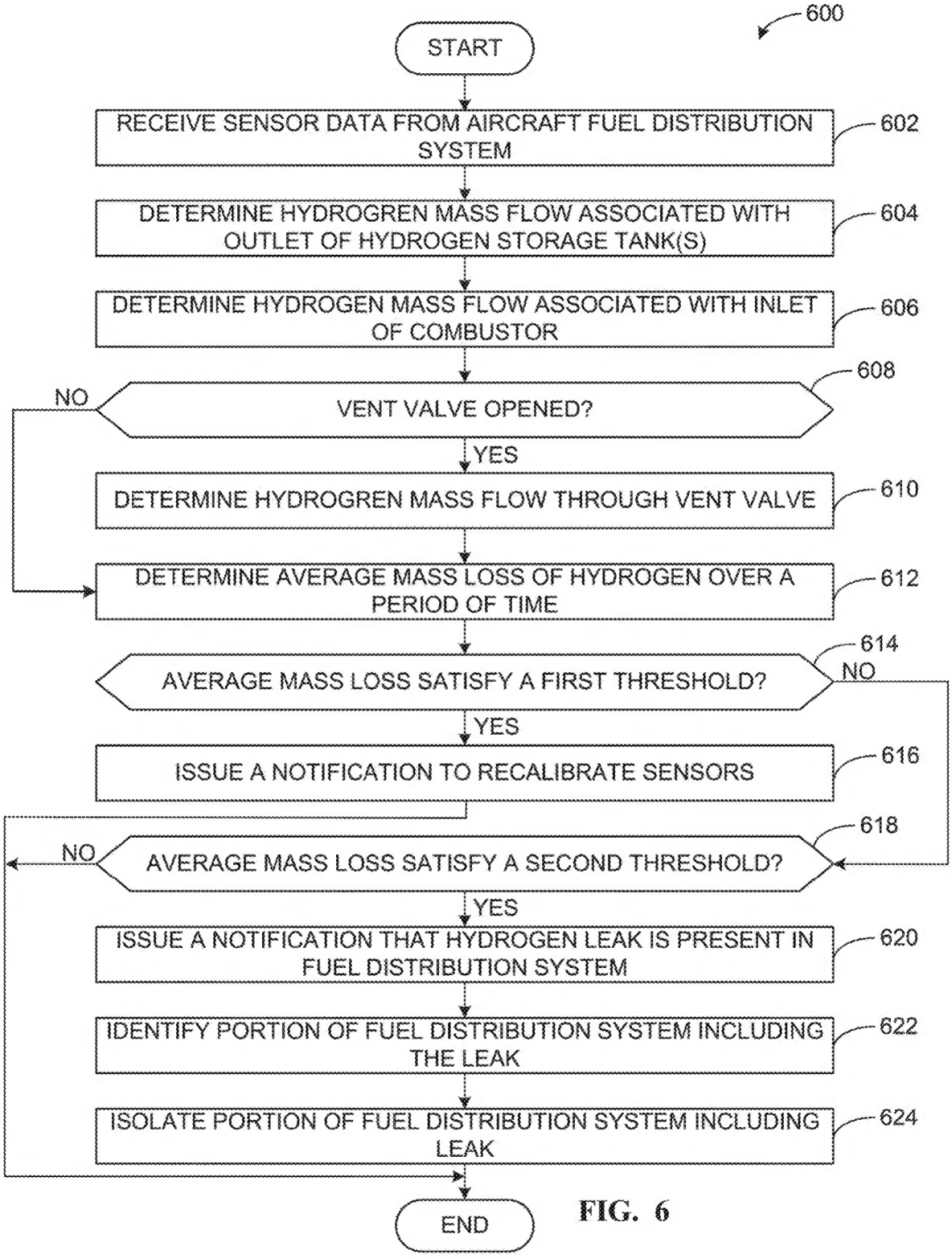
600
START
RECEIVE SENSOR DATA FROM AIRCRAFT FUEL DISTRIBUTION SYSTEM
602
DETERMINE HYDROGREN MASS FLOW ASSOCIATED WITH OUTLET OF HYDROGEN STORAGE TANK(S)
604
DETERMINE HYDROGEN MASS FLOW ASSOCIATED WITH INLET OF COMBUSTOR
606
608
NO
VENT VALVE OPENED?
YES
DETERMINE HYDROGREN MASS FLOW THROUGH VENT VALVE
610
DETERMINE AVERAGE MASS LOSS OF HYDROGEN OVER A PERIOD OF TIME
612
614
AVERAGE MASS LOSS SATISFY A FIRST THRESHOLD?
NO
YES
ISSUE A NOTIFICATION TO RECALIBRATE SENSORS
616
618
NO
AVERAGE MASS LOSS SATISFY A SECOND THRESHOLD?
YES
ISSUE A NOTIFICATION THAT HYDROGEN LEAK IS PRESENT IN FUEL DISTRIBUTION SYSTEM
620
IDENTIFY PORTION OF FUEL DISTRIBUTION SYSTEM INCLUDING THE LEAK
622
ISOLATE PORTION OF FUEL DISTRIBUTION SYSTEM INCLUDING LEAK
624
END

FIG. 6

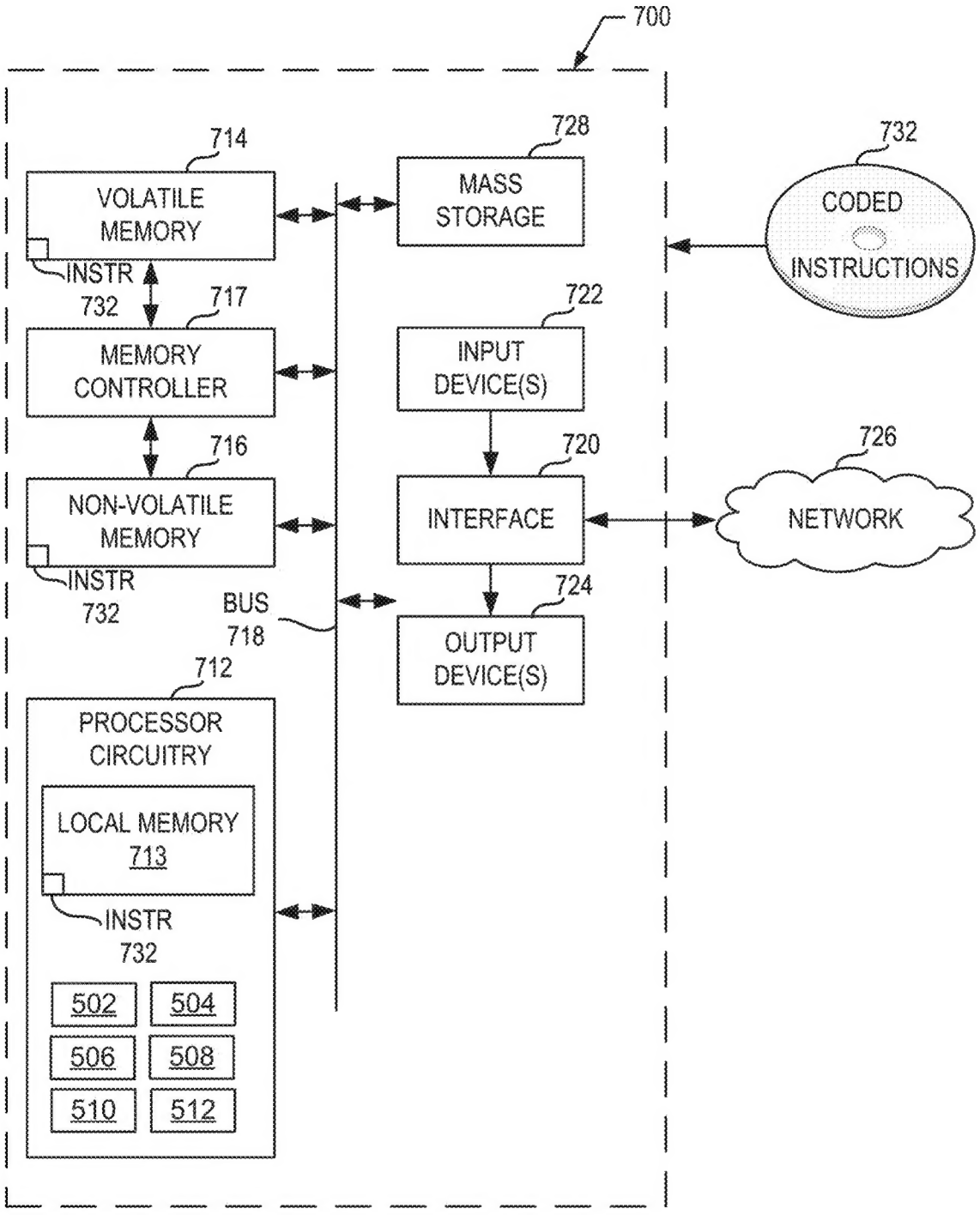
700
714
VOLATILE MEMORY
INSTR 732
717
MEMORY CONTROLLER
716
NON-VOLATILE MEMORY
INSTR 732
BUS 718
712
PROCESSOR CIRCUITRY
LOCAL MEMORY 713
INSTR 732
502
504
506
508
510
512
728
MASS STORAGE
722
INPUT DEVICE(S)
720
INTERFACE
724
OUTPUT DEVICE(S)
732
CODED INSTRUCTIONS
726
NETWORK

FIG. 7

# MONITORING SYSTEMS FOR HYDROGEN FUELED AIRCRAFT

## FIELD OF THE DISCLOSURE

**[0001]** This disclosure relates generally to fuel distribution systems, and, more particularly, to hydrogen distribution systems.

## BACKGROUND

**[0002]** Aircraft fuel distribution systems support fuel storage and fuel distribution to an engine. In some examples, a fuel system can include a single, gravity feed fuel tank with an associated fuel line connecting the tank to the aircraft engine. In some examples, multiple fuel tanks can be present as part of the fuel distribution system. The one or more tank(s) can be located in a wing, a fuselage, and/or a tail of the aircraft. The tank(s) can be connected to internal fuel pump(s) with associated valve(s) and/or plumbing to permit feeding of the engine, refueling, defueling, individual tank isolation, and/or overall optimization of an aircraft's center of gravity.

## BRIEF DESCRIPTION OF THE DRAWINGS

**[0003]** A full and enabling disclosure of the preferred embodiments, including the best mode thereof, directed to one of ordinary skill in the art, is set forth in the specification, which makes reference to the appended Figures, in which:

**[0004]** FIG. **1** is a simplified illustration including a hydrogen fuel distribution system in which the teachings of this disclosure can be implemented.

**[0005]** FIG. **2** is a schematic illustration of a first example fuel distribution system implemented in accordance with the teachings of this disclosure.

**[0006]** FIG. **3** is a schematic illustration of a second example fuel distribution system implemented in accordance with the teachings of this disclosure.

**[0007]** FIG. **4** is a block diagram of an example implementation of the controller of FIG. **1**.

**[0008]** FIGS. **5**A and **5**B are diagrams depicting the average mass loss of the fuel distribution systems of FIGS. **2** and/or **3**.

**[0009]** FIG. **6** is a flowchart representative of example machine readable instructions and/or example operations that may be executed by example processor circuitry to implement the controller of FIGS. **1** and **4**.

**[0010]** FIG. **7** is a block diagram of an example processing platform including processor circuitry structured to execute the example machine readable instructions of FIG. **6** to implement the controller circuitry of FIG. **4**.

**[0011]** The figures are not to scale. Instead, the thickness of the layers or regions may be enlarged in the drawings. In general, the same reference numbers will be used throughout the drawing(s) and accompanying written description to refer to the same or like parts. As used in this patent, stating that any part (e.g., a layer, film, area, region, or plate) is in any way on (e.g., positioned on, located on, disposed on, or formed on, etc.) another part, indicates that the referenced part is either in contact with the other part, or that the referenced part is above the other part with one or more intermediate part(s) located therebetween. Connection references (e.g., attached, coupled, connected, joined, detached, decoupled, disconnected, separated, etc.) are to be construed broadly and may include intermediate members between a collection of elements and relative movement between elements unless otherwise indicated. As used herein, the term "decouplable" refers to the capability of two parts to be attached, connected, and/or otherwise joined and then be detached, disconnected, and/or otherwise non-destructively separated from each other (e.g., by removing one or more fasteners, removing a connecting part, etc.). As such, connection/disconnection references do not necessarily infer that two elements are directly connected and in fixed relation to each other. Stating that any part is in "contact" with another part means that there is no intermediate part between the two parts.

**[0012]** Descriptors "first," "second," "third," etc., are used herein when identifying multiple elements or components which may be referred to separately. Unless otherwise specified or understood based on their context of use, such descriptors are not intended to impute any meaning of priority, physical order or arrangement in a list, or ordering in time but are merely used as labels for referring to multiple elements or components separately for ease of understanding the disclosed examples. In some examples, the descriptor "first" may be used to refer to an element in the detailed description, while the same element may be referred to in a claim with a different descriptor such as "second" or "third." In such instances, it should be understood that such descriptors are used merely for ease of referencing multiple elements or components.

## DETAILED DESCRIPTION

**[0013]** Hydrogen-based systems can be used to power vehicles such as aircraft and/or turbines. For aircraft-based usage, hydrogen can be stored as pressurized gas or in liquid form. Liquid hydrogen (LH2) storage tanks are lighter than tanks filled with gaseous hydrogen (GH2) due to the reduced tank volume needed to store liquid hydrogen versus gaseous hydrogen. Liquid hydrogen requires temperature regulation to minimize heat transfer and allow the liquid hydrogen to remain cold, thereby avoiding the vaporization of the hydrogen over time. Aircraft fuel distribution systems using cryogenic fuel tanks (e.g., fuels requiring storage at extremely low temperatures to maintain them in a liquid state) generally include a flow control valve, a volumetric flowmeter, a cryogenic valve, a flexible vacuum-jacketed flowline, and an onboard cryogenic fuel tank.

**[0014]** In addition to using liquid hydrogen, hydrogen-based fuel distribution systems can deliver gaseous hydrogen at required pressure(s) and/or flow rate(s) to a combustor to meet the transient performance requirements needed to assure that the engine meets both transient and cruise condition requirements. However, the fuel flow rate for an aircraft varies significantly during the flight mission. For example, the highest fuel flow rate is required during takeoff, which is approximately four times the fuel flow rate at cruise altitude.

**[0015]** Methods and apparatus disclosed herein incorporate liquid hydrogen (LH2), cryo-compressed hydrogen (CCH2) and/or gaseous hydrogen (GH2) into fuel distribution systems (e.g., a LH2 fuel distribution system, a GH2 fuel distribution system, a CCH2 fuel distribution system, etc.) of a gas turbine engine. Examples disclosed herein include a system that continuously monitors the health of the hydrogen tank(s) and the fuel distribution system(s) of a gas turbine associated with an aircraft. In some examples dis-

closed herein, pressure, temperature, and/or liquid level sensors determine the mass flow rate of the hydrogen in and/or out of the tanks as a function of time and a flowmeter determines the outflow of hydrogen into the combustor of the gas turbine engine. In some examples disclosed herein, the system can also determine the outflow of hydrogen vented via a vent valve. Examples disclosed herein compare the flow of hydrogen from the tanks and the outflowing hydrogen to determine a mass loss rate from the fuel distribution system. Examples disclosed herein can also utilized to analyze the health of a fuel distribution system including other hydrogen fuel sources (e.g., one or more cryo-compressed hydrogen tank(s), etc.).

**[0016]** In some examples disclosed herein, the average mass loss rate over a period of time can be compared to a plurality of thresholds. In some examples disclosed herein, if the mass loss rate is greater than zero over the period, the health monitoring system can conclude a leak is present in the fuel distribution system. In some such examples disclosed herein, the health monitoring system can identify the portion of the system including the leak and isolate the section to prevent additional hydrogen leaking. In some examples disclosed herein, if the mass loss rate is negative over the period (e.g., indicating a gain of mass, etc.), the health monitoring system can conclude that the sensors of the system need to be recalibrated. In some examples disclosed herein, if the mass loss rate is zero, the health monitoring system can conclude there are no health issues with the engines. In some examples disclosed herein, the system can be used to calibrate the flowmeter of the combustor.

**[0017]** For the figures disclosed herein, identical numerals indicate the same elements throughout the figures.

**[0018]** FIG. **1** is an example illustration of an aircraft **100** including an example fuel distribution system **102**. The fuel distribution system **102** includes an example tank **104** of hydrogen, which provides fuel to an example gas turbine engine **106**. Example implementations of the fuel distribution system **102** are described below in conjunction with FIGS. **2** and **3**. The example tank **104** can contain hydrogen in various states, including liquid, gaseous, and cryo-compressed states. The example tank **104** can be stored in any suitable location on the aircraft (e.g., in the wings, in the fuselage, in an external tank, etc.). In other examples, the tank **104** can include multiple tanks (herein referred to as a tank bank, etc.).

**[0019]** Although the aircraft **100** shown in FIG. **1** is an airplane, the embodiments described herein may also be applicable to other fixed-wing aircraft, including unmanned aerial vehicles (UAV). The fuel distribution system **102** can be used to provide hydrogen fuel that will be combusted in an example gas turbine engine **106** of the aircraft **100**. In the illustrated example of FIG. **1**, the aircraft includes a single gas turbine engine (e.g., the gas turbine engine **106**, etc.). In some examples, the aircraft **100** can include multiple gas turbine engines.

**[0020]** In FIG. **1**, the fuel distribution system **102** is controlled and monitored by example fuel distribution controller circuitry **108**. For example, the fuel distribution controller circuitry **108** can regulate the flow of hydrogen through the fuel distribution system **102** via one or more control mechanisms (e.g., valves, etc.) to meet a throttle demand from the aircraft **100**. The fuel distribution controller circuitry **108** monitors the health of the fuel distribution system **102**. For example, the fuel distribution controller circuitry **108** can determine an outflow of hydrogen from the tank **104** and inflow of hydrogen into the gas turbine engine **106**. The fuel distribution controller circuitry **108** can compare the inflow of hydrogen into the fuel distribution system **102** to the outflow of hydrogen out of the fuel distribution system **102** to determine a mass loss rate of the fuel distribution system **102**. In some examples, the fuel distribution controller circuitry **108** can compare the determined mass loss rate to one or more thresholds to determine the health of the fuel distribution system **102**. In some examples, the fuel distribution controller circuitry **108** can determine that a leak is present in the fuel distribution system **102** and/or the sensors of the fuel distribution system need to be recalibrated. An example implementation of the fuel distribution controller circuitry **108** is described below in conjunction with FIG. **4**.

**[0021]** The embodiments of the fuel tank(s) described herein may also be applicable to other applications where hydrogen is used as a fuel in the aircraft **100**. The embodiments described herein also may be applicable to engine(s) other than gas turbine engines. While the gas turbine engine **106** is an example of a power generator for powering the aircraft **100** using hydrogen as a fuel, hydrogen may also be used as a fuel for other power generators. For example, a power generator may be a fuel cell (e.g., hydrogen fuel cell, etc.) where the hydrogen is provided to the fuel cell to generate electricity by reacting with air.

**[0022]** FIG. **2** illustrates an example first fuel distribution system **200** using an example liquid hydrogen delivery assembly **202** and an example gaseous hydrogen delivery assembly **204**, which include an example GH2 tank bank **205** and an example LH2 tank **206**, respectively. In the example of FIG. **2**, the GH2 tank bank **205** and an example LH2 tank **206** fuel an example engine **209** of an aeronautical vehicle, where the engine can be an aeronautical gas turbine engine (e.g., the gas turbine engine **106** of FIG. **1**, etc.). In other examples, the first fuel distribution system **200** can be any other suitable land or aeronautical vehicle and the engine may be any other suitable engine mounted to or within the vehicle in any suitable manner. In the illustrated example of FIG. **2**, the first fuel distribution system **200** delivers fuel to an example combustor **210**.

**[0023]** The first fuel distribution system **200** of FIG. **2** includes the GH2 tank bank **205** to hold a first portion of hydrogen fuel in a gaseous phase, and/or the LH2 tank **206** to hold a second portion of hydrogen fuel in a liquid phase. In some examples, the GH2 tank bank **205** can be used to provide gaseous hydrogen during takeoff and climbing, while the LH2 tank **206** can be switched to during a cruising phase of flight. For example, fuel consumption needs can vary based on a particular phase of the flight (e.g., taxing, takeoff, cruising, etc.). A relatively low hydrogen fuel flow is required during the taxi operation, while the takeoff phase requires the highest consumption of fuel (e.g., about 100% of a maximum hydrogen fuel flow for a given flight path). Meanwhile, the climb phase shows reduced fuel consumption (e.g., between about 50% and about 90% of the maximum hydrogen fuel flow). Cruising is the longest operation during a given flight, with much lower fuel consumption (e.g., between about 25% and about 40% of the maximum hydrogen fuel flow). During approach and landing operations/flight phases, fuel flow is the lowest (e.g., less than about 20%, such as less than about 15% of the maximum

hydrogen fuel flow). Using the liquid hydrogen delivery assembly **202** and an example gaseous hydrogen delivery assembly **204** shown in FIG. **2** permits varying arrangement (s) of fuel distribution based on a given operation being performed by the aircraft (e.g., taxing, takeoff, cruising, etc.) to match the necessary fuel flows.

**[0024]** The flows from the GH2 tank bank **205** and the LH2 tank **206** are tracked by one or more sensor(s), which sense various operability parameters of the first fuel distribution system **200** of FIG. **2**. In the illustrated example of FIG. **2**, an example first sensor **212** is configured to sense flow data (e.g., pressure (P), temperature (T), etc.) relating to the GH2 tank bank **205** (depicted as $P_1$, $T_1$ in FIG. **2**) and an example second sensor **214** configured to sense flow data (e.g., pressure (P), temperature (T), and liquid level (L), etc.) relating to the LH2 tank **206** (depicted as $P_2$, $T_2$, $L_2$ in FIG. **2**).

**[0025]** The GH2 tank bank **205** stores a first portion of hydrogen fuel in a gaseous phase and the LH2 tank **206** stores a second portion of hydrogen fuel in a liquid phase. The GH2 tank bank **205** can be configured to store the first portion of hydrogen fuel at an increased pressure to reduce a necessary size of the GH2 tank bank **205** within an aircraft. For example, the GH2 tank bank **205** can be configured to store the first portion of hydrogen fuel at a pressure from about 100 bar up to about 1,000 bar. The GH2 tank bank **205** can be configured to store the first portion of the hydrogen fuel at a temperature within about 50° C. of an ambient temperature, or between about −50° C. and about 100° C. In some examples, the GH2 tank bank **205** can be configured as a plurality of GH2 tank bank **205** to reduce an overall size and weight that would otherwise be needed to contain the desired volume of the first portion of hydrogen fuel in the gaseous phase at the desired pressures. Gaseous hydrogen delivery can also include an example three-way boil-off valve **213** defining an example first input **216**, an example second input **218**, and an example output **220**.

**[0026]** In the example of FIG. **2**, the first input **216** is in fluid communication with the GH2 tank bank **205** for receiving a flow of the first portion of hydrogen fuel in the gaseous phase from the GH2 tank bank **205**. The second input **218** is in fluid communication with an example boil-off fuel assembly **250** for receiving a flow of gaseous hydrogen fuel from an example first GH2 buffer tank **254** of the boil-off fuel assembly **250**. The three-way boil-off valve **213** can be configured to combine and/or alternate the flows from the first input **216** and the second input **218** to a single flow of gaseous hydrogen through the output **220**. For example, the three-way boil-off valve **213** can be an active valve, such that an amount of gaseous hydrogen fuel provided from the first input **216**, as compared to the amount of gaseous hydrogen fuel provided from the second input **218**, to the output **220** can be actively controlled. In the illustrated example of FIG. **2**, an example seventh sensor **280** is configured to sense data (e.g., pressure (P), temperature (T), etc.) relating to the first GH2 buffer tank **254** (depicted as $P_7$, $T_7$ in FIG. **2**).

**[0027]** The example first fuel distribution system **200** includes a gaseous hydrogen delivery assembly (GHDA) flow regulator **226**. The GHDA flow regulator **226** can be configured as an actively controlled variable throughput valve configured to provide a variable throughput ranging from 0% (e.g., a completely closed off position) to 100% (e.g., a completely open position), as well as a number of intermediate throughput values therebetween. In FIG. **2**, the GHDA flow regulator **226** includes one or more variable flow valves to provide the variable throughput therethrough. In the illustrated example of FIG. **2**, a third sensor **228** measures flow data (e.g., pressure (P), temperature (T), etc.) downstream of the GHDA flow regulator **226** (depicted as $P_3$, $T_3$ in FIG. **2**).

**[0028]** In the example of FIG. **2**, the example first fuel distribution system **200** includes a three-way regulator valve **240**. The three-way regulator valve **240** defines an example first input **242**, an example second input **244**, and an example output **247**. The first input **242** is in fluid communication with the gaseous hydrogen delivery assembly **204** for receiving a flow of the first portion of hydrogen fuel in the gaseous phase from the GH2 tank bank **205**. The second input **244** is in fluid communication with the liquid hydrogen delivery assembly **202** for receiving a flow of the second portion of the hydrogen fuel in the gaseous phase from the LH2 tank **206**. The three-way regulator valve **240** may be configured to combine and/or alternate the flows from the first input **242** and the second input **244** to a single flow of gaseous hydrogen through the output **247**. In the illustrated example of FIG. **2**, the three-way regulator valve **240** is an active three-way regulator valve, including an actuator, such that an amount of hydrogen fuel provided from the first input **242**, as compared to the amount of hydrogen fuel provided from the second input **244**, to the output **247** may be actively controlled.

**[0029]** In the example of FIG. **2**, the second input **244** of the three-way regulator valve **240** receives hydrogen fuel originating from a liquid hydrogen delivery assembly **202** which includes the LH2 tank **206**, an example pump **246**, and an example heat exchanger **248** downstream of the pump **246**. In some examples, the LH2 tank **206** can define a fixed volume, such that as the LH2 tank **206** provides hydrogen fuel to the first fuel distribution system **200** substantially completely in the liquid phase, a volume of the liquid hydrogen fuel in the LH2 tank **206** decreases, and the volume is made up by, e.g., gaseous hydrogen fuel. During the normal course of storing a portion of hydrogen fuel in the liquid phase, an amount of the hydrogen fuel can vaporize (referred to herein as "boil-off.")

**[0030]** To prevent an internal pressure within the LH2 tank **206** from exceeding a pressure threshold, the first fuel distribution system **200** of FIG. **2** allows for a purging of gaseous hydrogen fuel from the LH2 tank **206**. For example, the first fuel distribution system **200** includes a boil-off fuel assembly **250** configured to receive gaseous hydrogen fuel from the LH2 tank **206**. The boil-off fuel assembly **250** generally includes an example vent valve **251**, an example boil-off compressor **252**, and an example first GH2 buffer tank **254**. The first GH2 buffer tank **254** is in fluid communication with the LH2 tank **206** and is further in fluid communication with the gaseous hydrogen delivery assembly **204**. During operation, gaseous fuel from the LH2 tank **206** can be vented from the LH2 tank **206** by the vent valve **251**, compressed by the boil-off compressor **252**, and provided to the first GH2 buffer tank **254**. The first GH2 buffer tank **254** stores the gaseous hydrogen fuel at a lower pressure than the pressure of the hydrogen fuel within the GH2 tank bank **205**. For example, the first GH2 buffer tank **254** can be configured to maintain gaseous hydrogen fuel therein at a pressure of between about 100 bar and about 400 bar. The pressurization of the gaseous hydrogen fuel in the

first GH2 buffer tank **254** can be provided substantially completely by the boil-off compressor **252**. Maintaining the gaseous hydrogen fuel in the first GH2 buffer tank **254** at the lower pressure can allow for the boil-off compressor **252** to be relatively small.

**[0031]** The LH2 tank **206** can be connected to an example vacuum jacketed (VJ) flowline(s) **256**, which is in connection with the pump **246**. In some examples, the VJ flowline (s) **256** can include a flow control valve. The pump **246** is configured to provide a flow of hydrogen fuel in the liquid phase from the LH2 tank **206** through the liquid hydrogen delivery assembly **202**. Operation of the pump **246** can be modulated (e.g., increased, decreased, etc.) to effectuate a change in a volume of the hydrogen fuel through the liquid hydrogen delivery assembly **202** and to an example regulator assembly **257** and the engine **209**. The pump **246** can be any suitable pump configured to provide a flow of liquid hydrogen fuel. In some examples, the pump **246** is a cryogenic pump. In some examples, the pump **246** is the primary pump for the liquid hydrogen delivery assembly **202** (e.g., provides a majority of a motive force available for providing a flow of liquid hydrogen through the liquid hydrogen delivery assembly **202**, etc.). In some examples, at least about 75% of the motive force available for providing a flow of liquid hydrogen through the liquid hydrogen delivery assembly **202** can be provided by the pump **246**. The pump **246** can generally define a maximum pump capacity and a minimum pump capacity (each in kilograms per second). A ratio of the maximum pump capacity to the minimum pump capacity may be referred to as a turndown ratio of the pump **246**. In some examples, the pump **246** can define a turndown ratio of at least 1:1 and up to about 6:1. In the example of FIG. **2**, an example motor **258** can be used to power the pump **246**.

**[0032]** The heat exchanger **248** is located downstream of the pump **246** and a flow control valve (not illustrated) and is configured to convert a portion of the hydrogen fuel through the liquid hydrogen delivery assembly **202** from the liquid phase to a gaseous phase. In the illustrated example of FIG. **2**, an example fourth sensor **260** is configured to sense flow data (e.g., pressure (P), temperature (T), etc.) downstream of the pump **246** and upstream of the heat exchanger **248** (depicted as $P_4$, $T_4$ in FIG. **2**). In some examples, the heat exchanger **248** can be in thermal communication with the engine **209**, and more specifically, with an accessory system of the engine **209** to provide heat to increase a temperature of the hydrogen fuel through the liquid hydrogen delivery assembly **202** to increase the temperature of the GH2 to a desired level.

**[0033]** In the example of FIG. **2**, the regulator assembly **257** further includes an example first buffer tank **262**, an example flowmeter **264**, and an example regulator **266**. The second GH2 buffer tank **262** is configured to vary a mass flow rate of the hydrogen fuel from a fluid inlet to a fluid outlet during at least certain operations. In some examples, the second GH2 buffer tank **262** can be configured to purge gaseous hydrogen fuel through a vent valve **274** when an internal pressure of the second GH2 buffer tank **262** (e.g., a pressure within an internal cavity) exceeds an upper threshold. For example, the second GH2 buffer tank **262** can accept hydrogen fuel (e.g., at a fluid inlet) at a greater flow rate than provided by the second GH2 buffer tank **262** (e.g., at a fluid outlet) even when an internal pressure of the second GH2 buffer tank **262** is at or exceeds an upper bound or upper threshold for the second GH2 buffer tank **262** (e.g., more rapidly reduce a mass flowrate of hydrogen fuel to the combustor **210** of the engine **209**, etc.). By virtue of its position within the regulator assembly **257**, the second GH2 buffer tank **262** is in fluid communication with the liquid hydrogen delivery assembly **202** and/or the gaseous hydrogen delivery assembly **204**. As such, the second GH2 buffer tank **262** can be configured to receive hydrogen fuel from the liquid hydrogen delivery assembly **202** and/or the gaseous hydrogen delivery assembly **204**. An example fifth sensor **267** measures properties of the hydrogen in the second GH2 buffer tank **262** (depicted as $P_5$, $T_5$ in FIG. **2**).

**[0034]** The flowmeter **264** of the regulator assembly **257** can sense data indicative of a mass flow rate of hydrogen fuel through the regulator assembly **257**. For example, the flowmeter **264** can sense data indicative of one or more of a temperature of the gaseous hydrogen fuel flowing therethrough and a pressure of the gaseous hydrogen fuel flowing therethrough. In some examples, data from the flowmeter **264** can be utilized to control the regulator **266** to ensure a desired amount of fuel is provided to the combustor **210** of the engine **209**. The regulator **266** can be configured as an actively controlled variable throughput valve configured to provide a variable throughput ranging from 0% (e.g., a completely closed off position) to 100% (e.g., a completely open position), as well as a number of intermediate throughput values therebetween. In some examples, the regulator **266** is in connection with the combustor **210** of the engine **209** via a flow control valve (not illustrated). In the illustrated example of FIG. **2**, an example sixth sensor **268** measures flow data (e.g., pressure (P), temperature (T), etc.) into the combustor **210** (depicted as $P_6$, $T_6$ in FIG. **2**).

**[0035]** FIG. **3** illustrates an example second fuel distribution system **300** using an example cryogenic compressed hydrogen (CCH2) tank **302** with an example thermo-syphoning loop **304** to deliver hydrogen to the example engine **209** of FIG. **2**. In the illustrated example of FIG. **3**, the example second fuel distribution system **300** includes the regulator assembly **257** of FIG. **2**, which includes the example first buffer tank **262** of FIG. **2**, the example flowmeter **264** of FIG. **2**, and the example regulator **266** of FIG. **2**. In the example of FIG. **3**, the CCH2 tank **302** fuels an example engine **209** of an aeronautical vehicle, where the engine can be an aeronautical gas turbine engine (e.g., the gas turbine engine **106** of FIG. **1**, etc.). In other examples, the second fuel distribution system **300** can be any other suitable land or aeronautical vehicle and the engine may be any other suitable engine mounted to or within the vehicle in any suitable manner. In the illustrated example of FIG. **3**, the second fuel distribution system **300** delivers fuel to an example combustor **210**.

**[0036]** The CCH2 tank **302** stores hydrogen at cryogenic temperatures (between 40 and 100 K) and relatively high pressures. The CCH2 tank **302** includes an insulated outer shell that permits hydrogen to be held cryogenic temperatures, thereby increasing the volume of hydrogen that can be stored in the tank **302**. Additionally, the CCH2 tank **302** holds hydrogen at a comparatively higher pressure than the LH2 tank **206** of FIG. **2**, increasing the comparatively thickness of the walls of the tank **302**. In some examples, the hydrogen in the tank **302** is stored in as GH2. In other examples, the hydrogen can be any suitable mixture of GH2 and LH2. In the example of FIG. **3**, the thermo-syphoning loop **304** includes an example automatic valve **306** and a first

example heat exchanger **308**. In the illustrated example of FIG. **304**, the automatic valve **306** releases (e.g., bleeds, etc.) portions of the hydrogen of the tank **302** for warming via the heat exchanger **308**. In the illustrated example of FIG. **3**, the function of the heat exchanger **308** ensures that the hydrogen of the tank **302** remains at an appropriate temperature and pressure. Additionally or alternatively, the properties of the tank **302** can be regulated by a heater and/or by regulating the insulation of the tank **302**. In some such examples, the thermo-syphoning loop **304** can be absent.

**[0037]** In the illustrated example of FIG. **3**, the hydrogen flows from the CCH2 tank **302** to an example heat exchanger **309**, which regulates the temperature of the flow leaving the CCH2 tank **302**. In the illustrated example of FIG. **3**, an example first sensor **310** measures flow data (e.g., pressure (P), temperature (T), etc.) leaving the CCH2 tank **302** (depicted as $P_1$, $T_1$ in FIG. **3**) and an example second sensor **312** measures flow data (e.g., pressure (P), temperature (T), etc.) leaving the heat exchanger **309** (depicted as $P_2$, $T_2$ in FIG. **3**).

**[0038]** In the example of FIG. **3**, the example second fuel distribution system **300** includes an example three-way automatic valve **314**. The three-way automatic valve **314** defines an example input **316**, an example first output **318**, and an example second output **320**. The input **316** is in fluid communication with the heat exchanger **309** for receiving a flow of hydrogen fuel in the gaseous phase from the CCH2 tank **302**. The first output **318** flow to an example regulator **322**, whose output is measured by an example third sensor **324**. The third sensor **324** measures flow data (e.g., pressure (P), temperature (T), etc.) from the regulator **322** (depicted as $P_3$, $T_3$ in FIG. **3**). The second output **320** is fluidly coupled to an example compressor **326**, whose output is measured by an example fourth sensor **328**. The fourth sensor **328** measures flow data (e.g., pressure (P), temperature (T), etc.) from the compressor **326** (depicted as $P_4$, $T_4$ in FIG. **3**). The second output **320** is in fluid communication with a compressor **326**.

**[0039]** The three-way automatic valve **314** can be an active valve, such that an amount of gaseous hydrogen fuel provided to the first output **318**, as compared to the amount of gaseous hydrogen fuel provided from the second output **320**, from the input **316**, can be actively controlled. In some examples, the three-way automatic valve **314** can be a passive valve. In the example of FIG. **3**, output from the three-way automatic valve **314** travels to the regulator assembly **257** (e.g., which includes the second GH2 buffer tank **262**, the flowmeter **264**, and the regulator **266**, etc.) prior to reaching the combustor **210**. Like the sixth sensor **268** of FIG. **2**, the example fifth sensor **330** measures flow data (e.g., pressure (P), temperature (T), etc.) into the combustor **210** (depicted as $P_3$, $T_3$ in FIG. **3**).

**[0040]** FIG. **4** is a block diagram of the example fuel distribution controller circuitry **108** of FIG. **1** that may be incorporated into a fuel system developed in accordance with teachings of this disclosure. In the example of FIG. **4**, the fuel distribution controller circuitry **108** includes an example sensor interface circuitry **402**, an example mass flow determiner circuitry **404**, an example mass loss determiner circuitry **406**, an example threshold comparator circuitry **408**, an example fuel distribution system interface circuitry **410**, an example notification generator circuitry **412**, and example data storage **414**. The example fuel distribution controller circuitry **108** can be used in conjunction with the first fuel distribution system **200** of FIG. **2** and/or the second fuel distribution system **300** of FIG. **3**.

**[0041]** The sensor interface circuitry **402** receives sensor data from the sensors of the fuel distribution system. For example, the sensor interface circuitry **402** can receive sensor data from the sensors **212**, **214**, **228**, **260**, **267**, **268**, **280** of the first fuel distribution system **200** of FIG. **2**. For example, the sensor interface circuitry **402** can receive sensor data from the sensors **310**, **312**, **328**, **330** of the second fuel distribution system **300** of FIG. **3**. In some examples, the sensor interface circuitry **402** can transform the received sensor data from a machine-readable format (e.g., a voltage, a current, etc.) to a human-readable format (e.g., a string, a floating-point number, an integer, etc.).

**[0042]** The mass flow determiner circuitry **404** determines the mass flow of hydrogen through the fuel distribution system via the accessed sensor data. For example, the mass flow determiner circuitry **404** can determine the mass flow from the GH2 tank bank **205** using data from the first sensor **212** to determine the density of the H2 in tank as a function of temperature and pressure:

$$\rho_1(t)=f(P_1(t),T_1(t)) \tag{1}$$

$$m_1(t)=\rho_1(t)V_{TANKBANK} \tag{2}$$

wherein $\rho_1$ is the density of the gaseous hydrogen of the GH2 tank bank **205**, t is time, $P_1$ is the pressure for the hydrogen as measured by the first sensor **212**, $T_1$ is the temperature of the hydrogen of the GH2 tank bank **205** as measured by the first sensor **212**, $m_1(t)$ is the mass of the GH2 tank bank **205** as a function of time (e.g., the mass flow from the GH2 tank bank **205** into the first fuel distribution system **200**, etc.), and $V_{TANKBANK}$ is the total volume of the GH2 tank bank **205**. Accordingly, using temperature and pressure sensor data from the first sensor **212** and the equations (1) and (2), the mass flow determiner circuitry **404** can determine the mass flow from the GH2 tank bank **205**. In some examples, the density of the tank bank can be the average density of the hydrogen across the different tanks of the GH2 tank bank **205**. In such examples, the density can be determined using sensors associated with the total outflow of the GH2 tank bank **205**. Additionally or alternatively, the density and mass flow from the GH2 tank bank **205** can be determined on a per tank basis, using flow sensors associated with each tank.

**[0043]** The mass flow determiner circuitry **404** can determine the mass flow from the LH2 tank **206** of FIG. **2** using sensor data from the second sensor **214**. For example, the mass flow determiner circuitry **404** can determine the mass flow from the LH2 tank **206** using data from the second sensor **214** to determine the density of the H2 in tank as a function of temperature and liquid level in the LH2 tank **206**:

$$\rho_{2L}(t)\ f(T_2(t)) \tag{3}$$

$$\rho_{2V}(t)\ f(T_2(t)) \tag{4}$$

$$m_2(t)\ \ \rho_{2L}(t)V_{LH2TANK}L_2(t)+\rho_{2V}(t)V_{LH2TANK}(1-L_2(t)) \tag{5}$$

wherein $\rho_{2L}$ is the density of the liquid hydrogen of the LH2 tank **206**, $\rho_{2V}$ is the density of the vaporous hydrogen of the LH2 tank **206**, $T_2$ is the temperature of the hydrogen of the LH2 tank **206** as measured by the second sensor **214**, $m_2(t)$

is the mass of the LH2 tank **206** as a function of time (e.g., the mass flow from the LH2 tank **206** into the first fuel distribution system **200**, etc.), $V_{LH2TANK}$ is the volume of the LH2 tank **206**, and $L_2(t)$ is the liquid level of the LH2 tank **206**. Accordingly, using temperature and liquid level sensor data from the second sensor **214** and the equations (3), (4) and (5), the mass flow determiner circuitry **404** can determine the mass flow from the LH2 tank **206**. In some examples, the $T_2$ can be assumed to be the saturation temperature of hydrogen.

**[0044]** The mass flow determiner circuitry **404** can determine the mass flow from the CCH2 tank **302** of FIG. **3** using sensor data from the first sensor **310**. For example, the mass flow determiner circuitry **404** can determine the mass flow from the CCH2 tank **302** using data from the second sensor **214** to determine the density of the H2 in tank as a function of temperature, pressure, and volume of the CCH2 tank **302**:

$$\rho_1(t) = f(P_1(t), T_1(t)) \tag{6}$$

$$m_1(t) = \rho_1(t)V \tag{7}$$

$$\dot{m}(t_{12}) = \frac{m_1(t_1) - m_1(t_2)}{t_2 - t_1} \tag{8}$$

wherein $\rho_1(t)$ is the density of the hydrogen in the CCH2 tank **302** as a function of time, $P_1(t)$ is the pressure of the hydrogen in the CCH2 tank **302** as a function of time as provided by the first sensor **310**, $T_1(t)$ is the temperature of the hydrogen in the CCH2 tank **302** as a function of time as provided by the first sensor **310**, $m_1(t)$ is the mass of the hydrogen in the CCH2 tank **302** as a function of time, V is the volume of the CCH2 tank **302**, $t_1$ is a first time, $t_2$ is a second time, $m_1(t_1)$ is the mass of hydrogen in the CCH2 tank **302** at the first time, $m_2(t_2)$ is the mass of hydrogen in the CCH2 tank **302** at the second time, and $\dot{m}(t_{12})$ is the average mass flow rate of hydrogen out of the CCH2 tank **302** between the first time and the second time. In other examples, the mass flow determiner circuitry **404** can determine the mass flow rate out of the CCH2 as a function of time by any other suitable means (e.g., a flowmeter, etc.).

**[0045]** In some examples, the mass loss determiner circuitry **406** can determine the flow of hydrogen into the combustor **210** (e.g., in the first fuel distribution system **200** of FIG. **2**, in the second fuel distribution system **300** of FIG. **3**, etc.) based on sensor data received from the flowmeter **264**. In some examples, the mass flow determiner circuitry **404** can determine if a vent valve of the fuel distribution system is open (e.g., the vent valve **274** associated with the first fuel distribution system **200** of FIG. **2**, the vent valve **331** associated with the second fuel distribution system **300** of FIG. **3**, etc.), which permits the venting of vaporous H2 from the fuel distribution system (e.g., based on sensor data from the sensor interface circuitry **402**, based on a user input, etc.). The mass flow determiner circuitry **404** can determine the mass vented from the second GH2 buffer tank **262** using the properties of the vent valve **274**, the pressure of the second GH2 buffer tank **262**, and the duration of the valve remains open. The mass flow determiner circuitry **404** can determine the mass of vented hydrogen using pressure data of the second GH2 buffer tank **262** from data obtained from the fifth sensor **267**:

$$m_{vent}(t_2) = m_{vent}(t_1) + \int_{t_1}^{t_2} \dot{m}dt = \int_{t_1}^{t_2} k_D A \sqrt{\rho_3(P_3 - P_{amb})k\left(\frac{2}{k+1}\right)^{\frac{k+1}{k}}}\, dt, \tag{9}$$

wherein $t_1$ is a first time when a vent valve **274** is opened, $t_2$ is a second time when a vent valve **274** is closed, $m_{vent}$ is mass of hydrogen vented through the vent valve **274**, $\dot{m}$ is exhaust rate of hydrogen as a function of time, $k_D$ is a discharge coefficient of the nozzle associated with the vent valve **274** (e.g., ~0.595, etc.), A is the area of the orifice of the vent valve **274**, $\rho_3$ is the density of hydrogen in the second GH2 buffer tank **262** (e.g., can be determined based on the pressure and temperature of the hydrogen in the second GH2 buffer tank **262**, etc.), $P_3$ is the pressure in the second GH2 buffer tank **262**, $P_{amb}$ is the ambient pressure, and k is 1.41, the specific heat capacity ratio of H2. In some examples, the mass flow exhausted via the vent valve **331** of FIG. **3** can also be determined via Equation (9). In other examples, the mass flow exhausted via the vent valve **331** of FIG. **3** can be determined by any suitable means.

**[0046]** The mass loss determiner circuitry **406** determines the mass loss from the fuel distribution systems **200**, **300**. For example, the mass loss determiner circuitry **406** can compare the mass inflows (e.g., from the LH2 tank **206**, from the GH2 tank bank **205**, etc.) and mass outflows (e.g., into the combustor **210**, vented from the second GH2 buffer tank **262**, etc.). For example, the mass loss determiner circuitry **406** can determine the mass balance of the first fuel distribution system **200** of FIG. **2** based on comparing the hydrogen flow from the LH2 tank **206** and the GH2 tank bank **205** and the hydrogen exhausted via the vent valve **274** and into the combustor **210**:

$$\int_{t_1}^{t_2} \dot{m}_{flow}dt = m_2(t_1) - m_2(t_2) + m_1(t_1) - m_1(t_2) + m_5(t_1) - m_5(t_1) - m_5(t_2) + m_7(t_1) - m_7(t_2) - m_{vent}(t_2) + m_{vent}(t_1) \tag{10}$$

$$ML(t_2) = m_2(t_1) - m_2(t_2) + m_1(t_1) - m_1(t_2) + m_5(t_1) - m_5(t_2) + m_7(t_1) - m_7(t_2) - m_{vent}(t_2) + m_{vent}(t_1) - \int_{t_1}^{t_2} \dot{m}_{flow}dt \tag{10}$$

wherein $\dot{m}_{flow}$ is the mass flow rate out of the first fuel distribution system **200** (as measured by the flowmeter **264** and/or sixth sensor **268**), $m_1(t_1)$ is the mass of hydrogen associated with the GH2 tank bank **205** at the first time, $m_1(t_2)$ is the mass of hydrogen associated with the GH2 tank bank **205** at the second time, $m_2(t_1)$ is the mass of hydrogen associated with the LH2 tank **206** at the first time, $m_2(t_2)$ is the mass of hydrogen associated with the LH2 tank **206** at the second time, $m_5(t_1)$ is the mass of hydrogen associated with the first GH2 buffer tank **254** at the first time, $m_5(t_2)$ is the mass of hydrogen associated with the first GH2 buffer tank **254** at the second time, $m_7(t_1)$ is the mass of hydrogen associated with the second GH2 buffer tank **262** at the first time, $m_7(t_2)$ is the mass of hydrogen associated with the second GH2 buffer tank **262** at the second time, $m_{vent}(t_2)$ is the mass of hydrogen vented through the vent valve **274** at the second time, $m_{vent}(t_1)$ is mass of hydrogen vented through the vent valve **274** at the first time, and $ML(t_2)$ is the cumulative mass loss between the first time and the second time.

**[0047]** The mass loss determiner circuitry **406** can determine the mass balance of the second fuel distribution system **300** of FIG. **3** based on comparing the hydrogen flow from

the CCH2 tank **302** and the hydrogen exhausted via the vent valve **274** and into the combustor **210**:

$$\int_{t_1}^{t_2} \dot{m}_{flow} dt = m_1(t_1) - m_1(t_2) + m_4(t_1) - m_4(t_2) - m_{vent}(t_2) + m_{vent}(t_1) \quad (12)$$

$$ML(t_2) = m_1(t_1) - (m_1(t_2) + m_4(t_1) - m_4(t_2) - m_{vent}(t_2) + m_{vent}(t_1) - \int_{t_1}^{t_2} \dot{m}_{flow} dt \quad (13)$$

wherein $\dot{m}_{flow}$ is the mass flow rate out of the second fuel distribution system **300** (as measured by the flowmeter **264** and/or the fifth sensor **330**), $m_1(t_1)$ is the mass of the hydrogen in the CCH2 tank **302** at the first time, $m_1(t_2)$ is the mass of the hydrogen in the CCH2 tank **302** at the second time, $m_4(t_1)$ is the mass of hydrogen associated with the fifth sensor **330** at the first time, $m_{vent}(t_2)$ is the mass of hydrogen vented through the vent valve **274** at the second time, $m_{vent}(t_1)$ is mass of hydrogen vented through the vent valve **274** at the first time, $ML(t_2)$ is the cumulative mass loss of the second fuel distribution system **300** between the first time and the second time, and $m_4(t_2)$ is the mass of hydrogen associated with the fifth sensor **330** at the second time. As such, the mass loss determiner circuitry **406** can determine the mass loss rate associated with the first fuel distribution system **200** of FIG. **2** and/or the second fuel distribution system **300** of FIG. **3**.

**[0048]** The threshold comparator circuitry **408** compares the determined mass loss rate to one or more thresholds. For example, the threshold comparator circuitry **408** can determine if the determined mass loss rate satisfies (e.g., exceeds, etc.) a first threshold (e.g., a warning threshold, etc.). Additionally or alternatively, the threshold comparator circuitry **408** can determine if the determined mass loss rate satisfies (e.g., is less than, etc.) a second threshold (e.g., a recalibration threshold, etc.). In some examples, the first threshold and the second threshold can be the same (e.g., zero, etc.). In such examples, when the mass loss rate is greater than the single threshold, the threshold comparator circuitry **408** can trigger actions (e.g., issuing a warning, isolating the leak, etc.) associated with satisfying the first threshold and when the mass loss rate is less than the single threshold, the threshold comparator circuitry **408** can trigger actions associated with satisfying the second threshold (e.g., generating a notification to recalibrate the sensors, etc.).

**[0049]** The fuel distribution system interface circuitry **410** interfaces with the first fuel distribution system **200** and/or the second fuel distribution system **300**. For example, if the threshold comparator circuitry **408** determines the mass loss rate satisfies the first threshold, the fuel distribution system interface circuitry **410** can, via the sensor data, determine where in the fuel distribution system (e.g., the first fuel distribution system **200** and/or the second fuel distribution system **300**, etc.). In some examples, the fuel distribution system interface circuitry **410** can present to a user of the fuel distribution system (e.g., an operator of the aircraft **100**, etc.) an indication of where the detected leak is. Additionally or alternatively, the fuel distribution system interface circuitry **410** can isolate the detected leak by closing a valve, closing a regulator, routing hydrogen through an alternative part of the fuel distribution system, etc.

**[0050]** The notification generator circuitry **412** generates an example notification for a user (e.g., a pilot, a technician, an operator, etc.) of the fuel distribution system (e.g., the first fuel distribution system **200**, the second fuel distribution system **300**, etc.). For example, the notification generator circuitry **412** can generate an audio notification (e.g., an alarm, an audio alert, a verbal alert, etc.), a visual notification (e.g., a dash indicator, a graphic, a text warning, etc.), a tactical notification, and/or any other suitable type of notification. For example, if the threshold comparator circuitry **408** determines that the mass loss rate satisfies the first threshold, the notification generator circuitry **412** can alert a user of the fuel distribution system that a leak may be occurring. For example, if the threshold comparator circuitry **408** determines that the mass loss rate satisfies the second threshold, the notification generator circuitry **412** alerting a user of the sensors of the fuel distribution system may need to be recalibrated.

**[0051]** The data storage **414** can be used to store any information associated the sensor interface circuitry **402**, the mass flow determiner circuitry **404**, the mass loss determiner circuitry **406**, the threshold comparator circuitry **408**, the fuel distribution system interface circuitry **410**, and/or the notification generator circuitry **412**. The example data storage **414** of the illustrated example of FIG. **4** can be implemented by any memory, storage device and/or storage disc for storing data such as flash memory, magnetic media, optical media, etc. Furthermore, the data stored in the example data storage **414** can be in any data format such as binary data, comma delimited data, tab delimited data, structured query language (SQL) structures, image data, etc.

**[0052]** While an example manner of implementing the fuel distribution controller circuitry **108** of FIG. **1** is illustrated in FIG. **4**, one or more of the elements, processes, and/or devices illustrated in FIG. **4** may be combined, divided, re-arranged, omitted, eliminated, and/or implemented in any other way. Further, the example sensor interface circuitry **402**, the example mass flow determiner circuitry **404**, the example mass loss determiner circuitry **406**, the example threshold comparator circuitry **408**, the example fuel distribution system interface circuitry **410**, the example notification generator circuitry **412**, and/or, more generally, the example the fuel distribution controller circuitry **108** of FIG. **1**, may be implemented by hardware alone or by hardware in combination with software and/or firmware. Thus, for example, any of the example sensor interface circuitry **402**, the example mass flow determiner circuitry **404**, the example mass loss determiner circuitry **406**, the example threshold comparator circuitry **408**, the example fuel distribution system interface circuitry **410**, the example notification generator circuitry **412**, and/or, more generally, the example fuel distribution controller circuitry **108**, could be implemented by processor circuitry, analog circuit(s), digital circuit(s), logic circuit(s), programmable processor(s), programmable microcontroller(s), graphics processing unit(s) (GPU(s)), digital signal processor(s) (DSP(s)), application specific integrated circuit(s) (ASIC(s)), programmable logic device(s) (PLD(s)), and/or field programmable logic device (s) (FPLD(s)) such as Field Programmable Gate Arrays (FPGAs). Further still, the example fuel distribution controller circuitry **108** of FIG. **1** may include one or more elements, processes, and/or devices in addition to, or instead of, those illustrated in FIG. **4**, and/or may include more than one of any or all of the illustrated elements, processes and devices.

**[0053]** FIG. **5**A illustrates an example first diagram **500** depicting the average mass loss of a fuel distribution system (e.g., the first fuel distribution system **200** of FIG. **2**, the second fuel distribution system **300** of FIG. **3**, etc.). In the illustrated example of FIG. **5**A, the first diagram **500**

includes an x-axis **502** corresponding to time and a y-axis **504** corresponding to an amount of cumulative fuel loss in the fuel distribution system. The first diagram **500** illustrates an example first relationship curve **506** having an example first trend line **508**.

**[0054]** The x-axis **502** measures the independent variable time, which begins at $T_1$, and ends at $T_2$. In some examples, an elapsed time between $T_1$ and $T_2$ is a period over which an average mass loss and/or cumulative mass loss is determined. The x-axis can be measured in any suitable unit (e.g., seconds, minutes, etc.). The y-axis **504** measures the cumulative mass loss, which ranges from $ML_{min}$ and $ML_{max}$ which are selected to ensure the first relationship curve **506** is visible in the first diagram **500**.

**[0055]** The first relationship curve **506** represents an instantaneous mass loss at a particular time determined via a mass balancing analysis conducted by the mass loss determiner circuitry **406** of FIG. **4**. In the illustrated example of FIG. **5**A, the instantaneous values of the first relationship curve **506** vary over the period between $T_1$ and $T_2$ due to noise in the sensor data (e.g., from the sensors **212**, **214**, **228**, **260**, **267**, **268**, etc.) caused by sensor errors and/or inaccuracy. As such, the average mass and/or the cumulative mass loss can be determined over the period, which is represented by the first trend line **508**. In the illustrated example of FIG. **5**A, the first trend line **508** is zero. As such, the fuel distribution controller circuitry **108** (e.g., by comparing the determined loss to the first threshold and the second threshold, etc.) can determine that the fuel distribution system (e.g., the first fuel distribution system **200**, the second fuel distribution system **300**, etc.) does not include a leak and/or require sensor recalibration.

**[0056]** FIG. **5**B illustrates an example second diagram **510** depicting an average mass loss of a fuel distribution system (e.g., the first fuel distribution system **200** of FIG. **2**, the second fuel distribution system **300** of FIG. **3**, etc.). In the illustrated example of FIG. **5**B, the second diagram **510** includes the x-axis **502**, the time, and the y-axis **504**, corresponding to an amount of cumulative fuel loss in the fuel distribution system. The example second diagram **510** illustrates an example second relationship curve **512** having an example second trend line **514**.

**[0057]** The second relationship curve **512** represents the instantaneous mass loss at a particular period of time determined via a mass balancing analysis conducted by the mass loss determiner circuitry **406** of FIG. **4**. Like the first relationship curve **506**, the instantaneous value of the second relationship curve **512** varies due to the received sensor data (e.g., from the sensors **212**, **214**, **228**, **260**, **267**, **268**, etc.) caused by sensor errors and/or inaccuracies. As such, the average mass and/or the cumulative mass loss can be determined over a time period, which is represented by the second trend line **514**. In the illustrated example of FIG. **5**B, the second trend line **514** has a downward slope. As such, the fuel distribution controller circuitry **108** (e.g., by comparing the determined loss to the first threshold and the second threshold, etc.) can determine that the fuel distribution system (e.g., the first fuel distribution system **200**, the second fuel distribution system **300**, etc.) includes a leak. In some such examples, the fuel distribution controller circuitry **108** can attempt to identify the location of the leak in the fuel distribution systems **200**, **300** and attempt to isolate the leak to prevent further hydrogen leakage.

**[0058]** A flowchart representative of example hardware logic circuitry, machine readable instructions, hardware implemented state machines, and/or any combination thereof for implementing the fuel distribution controller circuitry **108** of FIG. **1** is shown in FIG. **6**. The machine readable instructions may be one or more executable programs or portion(s) of an executable program for execution by processor circuitry, such as the processor circuitry **712** shown in the example processor platform **700** discussed below in connection with FIG. **7**. The program may be embodied in software stored on one or more non-transitory computer readable storage media such as a compact disk (CD), a floppy disk, a hard disk drive (HDD), a solid-state drive (SSD), a digital versatile disk (DVD), a Blu-ray disk, a volatile memory (e.g., Random Access Memory (RAM) of any type, etc.), or a non-volatile memory (e.g., electrically erasable programmable read-only memory (EEPROM), FLASH memory, an HDD, an SSD, etc.) associated with processor circuitry located in one or more hardware devices, but the entire program and/or parts thereof could alternatively be executed by one or more hardware devices other than the processor circuitry and/or embodied in firmware or dedicated hardware. The machine readable instructions may be distributed across multiple hardware devices and/or executed by two or more hardware devices (e.g., a server and a client hardware device). For example, the client hardware device may be implemented by an endpoint client hardware device (e.g., a hardware device associated with a user) or an intermediate client hardware device (e.g., a radio access network (RAN)) gateway that may facilitate communication between a server and an endpoint client hardware device). Similarly, the non-transitory computer readable storage media may include one or more mediums located in one or more hardware devices. Further, although the example program is described with reference to the flowchart illustrated in FIG. **6**, many other methods of implementing the example fuel distribution controller circuitry **108** may alternatively be used. For example, the order of execution of the blocks may be changed, and/or some of the blocks described may be changed, eliminated, or combined. Additionally or alternatively, any or all of the blocks may be implemented by one or more hardware circuits (e.g., processor circuitry, discrete and/or integrated analog and/or digital circuitry, an FPGA, an ASIC, a comparator, an operational-amplifier (op-amp), a logic circuit, etc.) structured to perform the corresponding operation without executing software or firmware. The processor circuitry may be distributed in different network locations and/or local to one or more hardware devices (e.g., a single-core processor (e.g., a single core central processor unit (CPU)), a multi-core processor (e.g., a multi-core CPU), etc.) in a single machine, multiple processors distributed across multiple servers of a server rack, multiple processors distributed across one or more server racks, a CPU and/or a FPGA located in the same package (e.g., the same integrated circuit (IC) package or in two or more separate housings, etc.).

**[0059]** The machine readable instructions described herein may be stored in one or more of a compressed format, an encrypted format, a fragmented format, a compiled format, an executable format, a packaged format, etc. Machine readable instructions as described herein may be stored as data or a data structure (e.g., as portions of instructions, code, representations of code, etc.) that may be utilized to create, manufacture, and/or produce machine executable

instructions. For example, the machine readable instructions may be fragmented and stored on one or more storage devices and/or computing devices (e.g., servers) located at the same or different locations of a network or collection of networks (e.g., in the cloud, in edge devices, etc.). The machine readable instructions may require one or more of installation, modification, adaptation, updating, combining, supplementing, configuring, decryption, decompression, unpacking, distribution, reassignment, compilation, etc., in order to make them directly readable, interpretable, and/or executable by a computing device and/or other machine. For example, the machine readable instructions may be stored in multiple parts, which are individually compressed, encrypted, and/or stored on separate computing devices, wherein the parts when decrypted, decompressed, and/or combined form a set of machine executable instructions that implement one or more operations that may together form a program such as that described herein.

**[0060]** In another example, the machine readable instructions may be stored in a state in which they may be read by processor circuitry, but require addition of a library (e.g., a dynamic link library (DLL)), a software development kit (SDK), an application programming interface (API), etc., in order to execute the machine readable instructions on a particular computing device or other device. In another example, the machine readable instructions may need to be configured (e.g., settings stored, data input, network addresses recorded, etc.) before the machine readable instructions and/or the corresponding program(s) can be executed in whole or in part. Thus, machine readable media, as used herein, may include machine readable instructions and/or program(s) regardless of the particular format or state of the machine readable instructions and/or program(s) when stored or otherwise at rest or in transit.

**[0061]** The machine readable instructions described herein can be represented by any past, present, or future instruction language, scripting language, programming language, etc. For example, the machine readable instructions may be represented using any of the following languages: C, C++, Java, C#, Perl, Python, JavaScript, HyperText Markup Language (HTML), Structured Query Language (SQL), Swift, etc.

**[0062]** As mentioned above, the example operations of FIG. **6** may be implemented using executable instructions (e.g., computer and/or machine readable instructions) stored on one or more non-transitory computer and/or machine readable media such as optical storage devices, magnetic storage devices, an HDD, a flash memory, a read-only memory (ROM), a CD, a DVD, a cache, a RAM of any type, a register, and/or any other storage device or storage disk in which information is stored for any duration (e.g., for extended time periods, permanently, for brief instances, for temporarily buffering, and/or for caching of the information). As used herein, the terms non-transitory computer readable medium and non-transitory computer readable storage medium are expressly defined to include any type of computer readable storage device and/or storage disk and to exclude propagating signals and to exclude transmission media.

**[0063]** FIG. **6** is a flowchart representative of example machine readable instructions and/or example operations **600** that may be executed and/or instantiated by processor circuitry to identify faults in a fuel distribution system (e.g., the first fuel distribution system **200** of FIG. **2**, the second fuel distribution system **300** of FIG. **3**, etc.). The machine readable instructions and/or the operations **600** of FIG. **6** begin at block **602**, at which the sensor interface circuitry **402** receives sensor data from the aircraft fuel distribution (e.g., the first fuel distribution system **200** of FIG. **2**, the second fuel distribution system **300** of FIG. **3**, etc.). For example, the sensor interface circuitry **402** can receive sensor data from the sensors **212**, **214**, **228**, **260**, **267**, **268** of the first fuel distribution system **200** of FIG. **2**. For example, the sensor interface circuitry **402** can receive sensor data from the sensors **310**, **312**, **324**, **328**, **330** of the second fuel distribution system **300** of FIG. **3**. In some examples, the sensor interface circuitry **402** can transform the received sensor data from a machine-readable format (e.g., a voltage, a current, etc.) to a human-readable format (e.g., a string, a floating-point number, an integer, etc.).

**[0064]** At block **604**, the mass flow determiner circuitry **404** determines hydrogen mass flow associated with outlet of the hydrogen fuel tanks. For example, when the first fuel distribution system **200** is being analyzed, the mass flow determiner circuitry **404** can determine the mass flow from the GH2 fuel tanks using Equations (1) and (2) and/or the mass flow rate from the LH2 tank **206** using the equations (3), (4), and (5). In some examples, when the second fuel distribution system **300** is being analyzed, the mass flow determiner circuitry **404** can determine the mass flow from the CCH2 tank using equations (6)-(8). In other examples, the mass flow rate determiner can determine the mass flow rate from the hydrogen sources from any suitable means.

**[0065]** At block **606**, the mass flow determiner circuitry **404** determines the hydrogen mass flow associated with the inlet of the combustor (e.g., the combustor **210** of FIGS. **2** and **3**, etc.) For example, the mass flow determiner circuitry **404** can determine the flow of hydrogen into the combustor **210** (e.g., in the first fuel distribution system **200** of FIG. **2**, in the second fuel distribution system **300** of FIG. **3**, etc.) based on sensor date received from the flowmeter **264**. In other examples, the mass flow determiner circuitry **404** can determine the mass flow of hydrogen into the engine by any other suitable means.

**[0066]** At block **608**, the mass flow determiner circuitry **404** determines whether the valve vent is open. For example, the mass flow determiner circuitry **404** can determine whether the valve vent is open based on a user input. In some examples, the mass flow determiner circuitry **404** can determine whether the valve vent is open based on sensor data received from the sensor interface circuitry **402** and/or any other suitable method. When the mass flow determiner circuitry **404** determines the valve vent is open, the operations **600** advance to block **610**. When the mass flow determiner circuitry **404** determines the valve vent is not open, the operations **600** advance to block **612**.

**[0067]** At block **610**, the mass flow determiner circuitry **404** determines the hydrogen mass flow through the vent valve. For example, the mass flow determiner circuitry **404** can determine the mass vented from the second GH2 buffer tank **262** using the properties of the vent valve **274**, the pressure of the second GH2 buffer tank **262**, and the duration of the valve remains open. In some examples, the mass flow determiner circuitry **404** can determine the mass flow through the vent using equation (9). In other examples, the mass flow determiner circuitry **404** can determine the hydrogen mass flow by any other suitable method.

**[0068]** At block **612**, the mass loss determiner circuitry **406** determines the average mass loss of hydrogen over a period of time. For example, the mass loss determiner circuitry **406** can compare the mass inflows (e.g., from the LH2 tank **206**, from the GH2 tank bank **205**, from the CCH2 tank **302**, etc.) and mass outflows (e.g., into the combustor **210**, vented from the second GH2 buffer tank **262**, etc.). For example, the mass loss determiner circuitry **406** can determine the average mass loss of hydrogen of the first fuel distribution system **200** using equations (10) and (11) and the second fuel distribution system **300** using equations (12) and (13). In other examples, the mass loss determiner circuitry **406** can determine the average mass loss by any other suitable means.

**[0069]** At block **614**, the threshold comparator circuitry **408** determines whether the average mass loss satisfies a first threshold. For example, the threshold comparator circuitry **408** can determine whether the average mass loss exceeds the first threshold (e.g., a recalibration threshold, etc.). When the threshold comparator circuitry **408** determines the mass loss satisfies the first threshold, the operations **600** advance to block **618**. When the threshold comparator circuitry **408** determines the mass loss does not satisfy the first threshold, the operations **600** advance to block **620**.

**[0070]** At block **616**, the notification generator circuitry **412** issues a notification to recalibrate sensors (e.g., the sensors **212**, **214**, **228**, **260**, **267**, **268** of FIG. **2**, the sensors **310**, **312**, **324**, **328**, **330** of FIG. **3**, etc.). For example, the notification generator circuitry **412** can generate an audio notification (e.g., an alarm, an audio alert, a verbal alert, etc.), a visual notification (e.g., a dash indicator, a graphic, a text warning, etc.), a tactical notification, and/or any other suitable type of notification to recalibrate.

**[0071]** At block **618**, the threshold comparator circuitry **408** determines whether the average mass loss satisfies a second threshold. For example, the threshold comparator circuitry **408** can compare the determined mass loss to a second threshold (e.g., a leak notification threshold, etc.) When the threshold comparator circuitry **408** determines the mass loss satisfies the second threshold, the operations **600** advance to block **620**. When the threshold comparator circuitry **408** determines the mass loss does not satisfy the first threshold, the operations **600** ends.

**[0072]** At block **620**, the notification generator circuitry **412** issues a notification that a hydrogen leak is present in the fuel distribution system. For example, the notification generator circuitry **412** can generate an audio notification (e.g., an alarm, an audio alert, a verbal alert, etc.), a visual notification (e.g., a dash indicator, a graphic, a text warning, etc.), a tactical notification, and/or any other suitable type of notification.

**[0073]** At block **622**, the fuel distribution system interface circuitry **410** identifies portions of the fuel distribution system including the leak. For example, when the threshold comparator circuitry **408** determines the mass loss rate satisfies the first threshold, the fuel distribution system interface circuitry **410** can, via the sensor data, determine where in the fuel distribution system (e.g., the first fuel distribution system **200** and/or the second fuel distribution system **300**, etc.) the leak has occurred. For example, the location of the leak can be inferred by controlling the valve **240** of FIG. **2**. In some such examples, if a leak is detected in the first fuel distribution system **200**, the first input **242** (e.g., supply from the GH2 tank bank **205**, etc.) can be closed. In such examples, if the leak persists, the fuel distribution system interface circuitry **410** can identify that the leak exists in the gaseous hydrogen delivery assembly **204**. Similarly, if a leak persists when the second input **244** is closed, the fuel distribution system interface circuitry **410** can identify that the leak exists in the liquid hydrogen delivery assembly **202**.

**[0074]** At block **624**, the fuel distribution system interface circuitry **410** isolates the portion of the fuel distribution system including the leak. For example, the fuel distribution system interface circuitry **410** can isolate the detected leak by closing a valve, closing a regulator, disabling the combustor **210**, routing hydrogen through an alternative part of the fuel distribution system, etc. In some examples, if a leak is detected in a portion of the fuel distribution system **200** that has an alternative path (e.g., back-up path, a redundant path, etc.) available, the fuel distribution system interface circuitry **410** can close the portion with the leak (e.g., via a valve, etc.) and the hydrogen fuel can be rout through the alternative. In some examples, if a leak is detected in one of the hydrogen delivery assemblies **202**, **204**, the fuel distribution system interface circuitry **410** can disable said delivery system (e.g., by closing a corresponding one of the inputs **242**, **244**, etc.) until the first fuel distribution system **200** can be serviced/repaired. The operations **600** end.

**[0075]** Including" and "comprising" (and all forms and tenses thereof) are used herein to be open ended terms. Thus, whenever a claim employs any form of "include" or "comprise" (e.g., comprises, includes, comprising, including, having, etc.) as a preamble or within a claim recitation of any kind, it is to be understood that additional elements, terms, etc., may be present without falling outside the scope of the corresponding claim or recitation. As used herein, when the phrase "at least" is used as the transition term in, for example, a preamble of a claim, it is open-ended in the same manner as the term "comprising" and "including" are open ended. The term "and/or" when used, for example, in a form such as A, B, and/or C refers to any combination or subset of A, B, C such as (1) A alone, (2) B alone, (3) C alone, (4) A with B, (5) A with C, (6) B with C, or (7) A with B and with C. As used herein in the context of describing structures, components, items, objects and/or things, the phrase "at least one of A and B" is intended to refer to implementations including any of (1) at least one A, (2) at least one B, or (3) at least one A and at least one B. Similarly, as used herein in the context of describing structures, components, items, objects and/or things, the phrase "at least one of A or B" is intended to refer to implementations including any of (1) at least one A, (2) at least one B, or (3) at least one A and at least one B. As used herein in the context of describing the performance or execution of processes, instructions, actions, activities and/or steps, the phrase "at least one of A and B" is intended to refer to implementations including any of (1) at least one A, (2) at least one B, or (3) at least one A and at least one B. Similarly, as used herein in the context of describing the performance or execution of processes, instructions, actions, activities and/or steps, the phrase "at least one of A or B" is intended to refer to implementations including any of (1) at least one A, (2) at least one B, or (3) at least one A and at least one B.

**[0076]** As used herein, singular references (e.g., "a", "an", "first", "second", etc.) do not exclude a plurality. The term "a" or "an" object, as used herein, refers to one or more of

that object. The terms "a" (or "an"), "one or more", and "at least one" are used interchangeably herein. Furthermore, although individually listed, a plurality of means, elements or method actions may be implemented by, e.g., the same entity or object. Additionally, although individual features may be included in different examples or claims, these may possibly be combined, and the inclusion in different examples or claims does not imply that a combination of features is not feasible and/or advantageous.

**[0077]** FIG. **7** is a block diagram of an example processor platform **700** including processor circuitry structured to execute the example machine readable instructions of FIG. **6** to implement the fuel distribution controller circuitry of FIGS. **1** and **4**. The processor platform **700** can be, for example, a server, a personal computer, a workstation, a self-learning machine (e.g., a neural network), a mobile device (e.g., a cell phone, a smart phone, a tablet such as an iPad™), a personal digital assistant (PDA), an Internet appliance, a DVD player, a CD player, a digital video recorder, a Blu-ray player, a gaming console, a personal video recorder, a set top box, a headset (e.g., an augmented reality (AR) headset, a virtual reality (VR) headset, etc.) or other wearable device, or any other type of computing device.

**[0078]** The processor platform **700** of the illustrated example includes processor circuitry **712**. The processor circuitry **712** of the illustrated example is hardware. For example, the processor circuitry **712** can be implemented by one or more integrated circuits, logic circuits, FPGAs microprocessors, CPUs, GPUs, DSPs, and/or microcontrollers from any desired family or manufacturer. The processor circuitry **712** may be implemented by one or more semiconductor based (e.g., silicon based) devices. In this example, the processor circuitry **712** implements the sensor interface circuitry **402**, the mass flow determiner circuitry **404**, the mass loss determiner circuitry **406**, the threshold comparator circuitry **408**, the fuel distribution system interface circuitry **410**, and the notification generator circuitry **412**.

**[0079]** The processor circuitry **712** of the illustrated example includes a local memory **713** (e.g., a cache, registers, etc.). The processor circuitry **712** of the illustrated example is in communication with a main memory including a volatile memory **714** and a non-volatile memory **716** by a bus **718**. The volatile memory **714** may be implemented by Synchronous Dynamic Random Access Memory (SDRAM), Dynamic Random Access Memory (DRAM), RAMBUS® Dynamic Random Access Memory (RDRAM®), and/or any other type of RAM device. The non-volatile memory **716** may be implemented by flash memory and/or any other desired type of memory device. Access to the main memory **714**, **716** of the illustrated example is controlled by a memory controller **717**.

**[0080]** The processor platform **700** of the illustrated example also includes interface circuitry **720**. The interface circuitry **720** may be implemented by hardware in accordance with any type of interface standard, such as an Ethernet interface, a universal serial bus (USB) interface, a Bluetooth® interface, a near field communication (NFC) interface, a PCI interface, and/or a PCIe interface.

**[0081]** In the illustrated example, one or more input devices **722** are connected to the interface circuitry **720**. The input device(s) **722** permit(s) a user to enter data and/or commands into the processor circuitry **712**. The input device(s) **722** can be implemented by, for example, an audio sensor, a microphone, a camera (still or video), a keyboard, a button, a mouse, a touchscreen, a track-pad, a trackball, an isopoint device, and/or a voice recognition system.

**[0082]** One or more output devices **724** are also connected to the interface circuitry **720** of the illustrated example. The output devices **724** can be implemented, for example, by display devices (e.g., a light emitting diode (LED), an organic light emitting diode (OLED), a liquid crystal display (LCD), a cathode ray tube (CRT) display, an in-place switching (IPS) display, a touchscreen, etc.), a tactile output device, a printer, and/or speaker. The interface circuitry **720** of the illustrated example, thus, typically includes a graphics driver card, a graphics driver chip, and/or graphics processor circuitry such as a GPU.

**[0083]** The interface circuitry **720** of the illustrated example also includes a communication device such as a transmitter, a receiver, a transceiver, a modem, a residential gateway, a wireless access point, and/or a network interface to facilitate exchange of data with external machines (e.g., computing devices of any kind) by a network **726**. The communication can be by, for example, an Ethernet connection, a digital subscriber line (DSL) connection, a telephone line connection, a coaxial cable system, a satellite system, a line-of-site wireless system, a cellular telephone system, an optical connection, etc.

**[0084]** The processor platform **700** of the illustrated example also includes one or more mass storage devices **728** to store software and/or data. Examples of such mass storage devices **728** include magnetic storage devices, optical storage devices, floppy disk drives, HDDs, CDs, Blu-ray disk drives, redundant array of independent disks (RAID) systems, solid state storage devices such as flash memory devices, and DVD drives.

**[0085]** The machine executable instructions **732**, which may be implemented by the machine readable instructions of FIG. **6**, may be stored in the mass storage device **728**, in the volatile memory **714**, in the non-volatile memory **716**, and/or on a removable non-transitory computer readable storage medium such as a CD or DVD.

**[0086]** From the foregoing, it will be appreciated that example systems, methods, apparatus, and articles of manufacture have been disclosed that monitor the health of hydrogen fuel based distribution systems. Examples disclosed herein can identify if a leak is present in the fuel distribution system using sensor data collected over a period of time. In some such examples, the health monitoring systems disclosed herein can identify the portion of the system including the leak and isolate the section to prevent additional hydrogen leaking. Examples disclosed herein can also determine if the sensors need to be recalibrated based on detected negative mass loss, thereby ensuring the systems sensors are presenting accurate readings.

**[0087]** Further aspects of the present disclosure are provided by the subject matter of the following clauses:

**[0088]** Example 1 includes a fuel distribution system including a first hydrogen fuel tank, a first sensor associated with the first hydrogen fuel tank, a second sensor associated with a combustor, and a controller to determine a first rate of change in a first amount of hydrogen in the first hydrogen fuel tank based on a first input from the first sensor, determine a flow rate of hydrogen into the combustor based on a second input from the second sensor, and determine an average mass loss rate based on the first rate of change and

the flow rate, and in response to determining the average mass loss rate satisfies a first threshold, determine a leak is present in the fuel distribution system.

**[0089]** Example 2 includes the fuel distribution system of any preceding clause, further including a second hydrogen fuel tank and wherein the controller is further to determine a second rate of change in a second amount of hydrogen in the second hydrogen fuel tank, and the controller further determines the average mass loss rate based on the second rate of change.

**[0090]** Example 3 includes the fuel distribution system of any preceding clause, wherein the first hydrogen fuel tank is a liquid hydrogen fuel tank and the second hydrogen fuel tank is a gaseous hydrogen fuel tank.

**[0091]** Example 4 includes the fuel distribution system of any preceding clause, wherein the first hydrogen fuel tank is a cryocompressed hydrogen fuel tank.

**[0092]** Example 5 includes the fuel distribution system of any preceding clause, wherein the controller is further to in response to determining the average mass loss rate satisfies a second threshold, determine at least one of the first sensor or the second sensor requires recalibration, and issue a notification to recalibrate the first sensor or the second sensor.

**[0093]** Example 6 includes the fuel distribution system of any preceding clause, wherein the controller is, in response to determining the average mass loss rate satisfies the first threshold, further to identify a location of the leak in the fuel distribution system, and isolate the location in the fuel distribution system.

**[0094]** Example 7 includes the fuel distribution system of any preceding clause, wherein the first threshold is zero.

**[0095]** Example 8 includes a non-transitory computer readable medium comprising instructions, which when executed cause a processor to determine a first rate of change in a first amount of hydrogen in a first hydrogen fuel tank based on a first input from a first sensor associated with the first hydrogen fuel tank, determine a flow rate of hydrogen into a combustor of a gas turbine engine based on a second input from a second sensor associated with the combustor, the combustor coupled to the first hydrogen fuel tank via a fuel distribution system, and determine an average mass loss rate based on the first rate of change and the flow rate, and in response to determining the average mass loss rate satisfies a first threshold, determine a leak is present in the fuel distribution system.

**[0096]** Example 9 includes the non-transitory computer readable medium of any preceding clause, wherein the instructions when executed, cause the processor to determine a second rate of change in a second amount of hydrogen in a second hydrogen fuel tank, and further determine the average mass loss rate based on the second rate of change.

**[0097]** Example 10 includes the non-transitory computer readable medium of any preceding clause, wherein the first hydrogen fuel tank is a liquid hydrogen fuel tank and the second hydrogen fuel tank is a gaseous hydrogen fuel tank.

**[0098]** Example 11 includes the non-transitory computer readable medium of any preceding clause, wherein the first hydrogen fuel tank is a cryo-compressed hydrogen fuel tank.

**[0099]** Example 12 includes the non-transitory computer readable medium of any preceding clause, wherein the instructions when executed, cause the processor to in response to determining the average mass loss rate satisfies a second threshold, determine at least one of the first sensor or the second sensor requires recalibration, and issue a notification to recalibrate the first sensor or the second sensor.

**[0100]** Example 13 includes the non-transitory computer readable medium of any preceding clause, wherein the instructions when executed, cause the processor to in response to determining the average mass loss rate satisfies the first threshold identify a location of the leak in the fuel distribution system, and isolate the location in the fuel distribution system.

**[0101]** Example 14 includes the non-transitory computer readable medium of any preceding clause, wherein the first threshold is zero.

**[0102]** Example 15 includes a method including determining a first rate of change in a first amount of hydrogen in a first hydrogen fuel tank based on a first input from a first sensor associated with the first hydrogen fuel tank, determining a flow rate of hydrogen into a combustor of a gas turbine engine based on a second input from a second sensor associated with the combustor, the combustor coupled to the first hydrogen fuel tank via a fuel distribution system, and determining an average mass loss rate based on the first rate of change and the flow rate, and in response to determining the average mass loss rate satisfies a first threshold, determining a leak is present in the fuel distribution system.

**[0103]** Example 16 includes the method of any preceding clause, further including determining a second rate of change in a second amount of hydrogen in a second hydrogen fuel tank, and further determining the average mass loss rate based on the second rate of change.

**[0104]** Example 17 includes the method of any preceding clause, wherein the first hydrogen fuel tank is a liquid hydrogen fuel tank and the second hydrogen fuel tank is a gaseous hydrogen fuel tank.

**[0105]** Example 18 includes the method of any preceding clause, further including in response to determining the average mass loss rate satisfies a second threshold, determining at least one of the first sensor or the second sensor requires recalibration, and issuing a notification to recalibrate the first sensor or the second sensor.

**[0106]** Example 19 includes the method of any preceding clause, further including, in response to determining the average mass loss rate satisfies the first threshold identifying a location of the leak in the fuel distribution system, and isolating the location in the fuel distribution system.

**[0107]** Example 20 includes the method of any preceding clause, wherein the first threshold is zero.

**[0108]** Example 21 includes the mass loss average mass loss rate is determined based on an integral of the mass flow rate of the fuel distribution system, a flow of hydrogen through a vent of the fuel distribution system, the first rate of change, the second rate of change and a third rate of change in a third amount of hydrogen in a buffer tank of the fuel distribution system.

**[0109]** Example 22 the mass loss average mass loss rate is determined based on an integral of the mass flow rate of the fuel distribution system, a flow of hydrogen through a vent of the fuel distribution system, the first rate of change, the second rate of change, a third rate of change in a third amount of hydrogen in a first buffer tank of the fuel distribution system, and a fourth rate of change in a fourth amount of hydrogen in a second buffer tank of the fuel distribution system.

**[0110]** Example 22 includes an apparatus including a first means for hydrogen storage, a first means for sensing associated with the first means for hydrogen storage, a second means for sensing associated with a combustor, a means for processing to determine a first rate of change in a first amount of hydrogen in the first means for hydrogen storage based on a first input from the first means for sensing, determine a flow rate of hydrogen into the combustor based on a second input from the second means for sensing, and determine an average mass loss rate based on the first rate of change and the flow rate, and in response to determining the average mass loss rate satisfies a first threshold, determine a leak is present in the apparatus.

**[0111]** Example 23 includes the apparatus of any preceding clause, further including a second means for hydrogen storage and wherein the means for processing is further to determine a second rate of change in a second amount of hydrogen in the second means for hydrogen storage, and the means for processing further determines the average mass loss rate based on the second rate of change.

**[0112]** Example 24 includes the apparatus of any preceding clause, wherein the first means for hydrogen storage contains liquid hydrogen and the second means for hydrogen storage contains gaseous hydrogen.

**[0113]** Example 25 includes the apparatus of any preceding clause, wherein the first means for hydrogen storage includes a cryo-compressed gaseous hydrogen.

**[0114]** Example 26 includes the apparatus of any preceding clause, wherein the means for processing is further to in response to determining the average mass loss rate satisfies a second threshold, determine at least one of the first means for sensing or the second means for sensing requires recalibration, and issue a notification to recalibrate first means for sensing or the second means for sensing.

**[0115]** Example 27 includes the apparatus of any preceding clause, wherein the means for processing is, in response to determining the average mass loss rate satisfies the first threshold, further to identify a location of the leak in the apparatus, and isolate the location in the apparatus.

**[0116]** Example 28 includes the apparatus of any preceding clause, wherein the first threshold is zero.

**[0117]** Although certain example systems, methods, apparatus, and articles of manufacture have been disclosed herein, the scope of coverage of this patent is not limited thereto. On the contrary, this patent covers all systems, methods, apparatus, and articles of manufacture fairly falling within the scope of the claims of this patent.

**[0118]** The following claims are hereby incorporated into this Detailed Description by this reference, with each claim standing on its own as a separate embodiment of the present disclosure.

**1**. A fuel distribution system including:
- a first hydrogen fuel tank;
- a first sensor associated with the first hydrogen fuel tank;
- a second sensor associated with a combustor; and
- a controller configured to:
  - determine a first rate of change in a first amount of hydrogen in the first hydrogen fuel tank based on (1) a liquid level of the first hydrogen fuel tank, (2) a volume of the first hydrogen fuel tank, (3) a first density of liquid hydrogen in the first hydrogen fuel tank, and (4) a second density of a gaseous hydrogen in the first hydrogen fuel tank, the liquid level based on a first input from the first sensor;
  - determine a flow rate of hydrogen into the combustor based on a second input from the second sensor;
  - determine an average mass loss rate based on the first rate of change and the flow rate; and
  - in response to determining the average mass loss rate satisfies a first threshold, determine a leak is present in the fuel distribution system.

**2**. The fuel distribution system of claim **1**, further including a second hydrogen fuel tank and wherein the controller is further to determine a second rate of change in a second amount of hydrogen in the second hydrogen fuel tank, and the controller further configured to determine the average mass loss rate based on the second rate of change.

**3**. The fuel distribution system of claim **2**, wherein the second hydrogen fuel tank is a gaseous hydrogen fuel tank.

**4**. The fuel distribution system of claim **1**, wherein the first hydrogen fuel tank is a cryo-compressed hydrogen fuel tank.

**5**. The fuel distribution system of claim **1**, wherein the controller is further configured to:
- in response to determining the average mass loss rate satisfies a second threshold, determine at least one of the first sensor or the second sensor requires recalibration; and
- issue a notification to recalibrate the first sensor or the second sensor.

**6**. The fuel distribution system of claim **1**, wherein the controller is, in response to determining the average mass loss rate satisfies the first threshold, further configured to:
- identify a location of the leak in the fuel distribution system; and
- isolate the location in the fuel distribution system.

**7**. The fuel distribution system of claim **1**, wherein the first threshold is zero.

**8**. A non-transitory computer readable medium comprising instructions, which, when executed, cause a processor to:
- determine a first rate of change in a first amount of hydrogen in a first hydrogen fuel tank based on (1) a liquid level of the first hydrogen fuel tank, (2) a volume of the first hydrogen fuel tank, (3) a first density of liquid hydrogen in the first hydrogen fuel tank, and (4) a second density of a gaseous hydrogen in the first hydrogen fuel tank, the liquid level based on a first input from a first sensor associated with the first hydrogen fuel tank;
- determine a flow rate of hydrogen into a combustor of a gas turbine engine based on a second input from a second sensor associated with the combustor, the combustor coupled to the first hydrogen fuel tank via a fuel distribution system;
- determine an average mass loss rate based on the first rate of change and the flow rate; and
- in response to determining the average mass loss rate satisfies a first threshold, determine a leak is present in the fuel distribution system.

**9**. The non-transitory computer readable medium of claim **8**, wherein the instructions when executed, cause the processor to:
- determine a second rate of change in a second amount of hydrogen in a second hydrogen fuel tank; and
- further determine the average mass loss rate based on the second rate of change.

**10**. The non-transitory computer readable medium of claim **9**, wherein the second hydrogen fuel tank is a gaseous hydrogen fuel tank.

**11**. The non-transitory computer readable medium of claim **8**, wherein the first hydrogen fuel tank is a cryo-compressed hydrogen fuel tank.

**12**. The non-transitory computer readable medium of claim **8**, wherein the instructions when executed, cause the processor to:

in response to determining the average mass loss rate satisfies a second threshold, determine at least one of the first sensor or the second sensor requires recalibration; and

issue a notification to recalibrate the first sensor or the second sensor.

**13**. The non-transitory computer readable medium of claim **8**, wherein the instructions when executed, cause the processor to in response to determining the average mass loss rate satisfies the first threshold:

identify a location of the leak in the fuel distribution system; and

isolate the location in the fuel distribution system.

**14**. The non-transitory computer readable medium of claim **8**, wherein the first threshold is zero.

**15**. A method including:

determining a first rate of change in a first amount of hydrogen in a first hydrogen fuel tank based on (1) a liquid level of the first hydrogen fuel tank, (2) a volume of the first hydrogen fuel tank, (3) a first density of liquid hydrogen in the first hydrogen fuel tank, and (4) a second density of a gaseous hydrogen in the first hydrogen fuel tank, the liquid level based on a first input from a first sensor associated with the first hydrogen fuel tank;

determining a flow rate of hydrogen into a combustor of a gas turbine engine based on a second input from a second sensor associated with the combustor, the combustor coupled to the first hydrogen fuel tank via a fuel distribution system;

determining an average mass loss rate based on the first rate of change and the flow rate; and

in response to determining the average mass loss rate satisfies a first threshold, determining a leak is present in the fuel distribution system.

**16**. The method of claim **15**, further including:

determining a second rate of change in a second amount of hydrogen in a second hydrogen fuel tank; and

further determining the average mass loss rate based on the second rate of change.

**17**. The method of claim **16**, wherein the second hydrogen fuel tank is a gaseous hydrogen fuel tank.

**18**. The method of claim **15**, further including:

in response to determining the average mass loss rate satisfies a second threshold, determining at least one of the first sensor or the second sensor requires recalibration; and

issuing a notification to recalibrate the first sensor or the second sensor.

**19**. The method of claim **15**, further including, in response to determining the average mass loss rate satisfies the first threshold:

identifying a location of the leak in the fuel distribution system; and

isolating the location in the fuel distribution system.

**20**. The method of claim **15**, wherein the first threshold is zero.

* * * * *